"PROVISION OF MISSING FACILITIES FOR THE SHAIKH AYAZ UNIVERSITY SHIKARPUR"

GUEST HOUSE

TENDER DRAWINGS

MARCH, 2022

DESIGN BY

NEW VISION ENGINEERING CONSULTANT

HEAD OFFICE:

Office No.B-6 Second Floor Masood Arcade
IJP Road Islamabad.
Ph: +92-51-4848375, Fax: +92-51-4848375
Email: newvisionec@yahoo.com

REGIONAL OFFICE:

287-A Street # 06 Cavalry
Ground Cantt. Lahore.
Ph: +92-42-37250130,

LIST OF DRAWINGS

S.NO.	DRAWING TITLE	DRG. NO
	ARCHITECTURE DRAWINGS	
1	LIST OF DRAWING	LS-00
2	GROUND FLOOR PLAN	AR-01
3	FIRST FLOOR PLAN	AR-02
4	ROOF PLAN	AR-03
5	ELEVATION E1	AR-04
6	ELEVATION E2	AR-05
7	SCHEDULE OF OPENINGS	AR-06
8	DOOR & WINDOW ELEVATION	AR-07
9	FLOOR FINISHING DETAILS	AR-08
10	RAMP DETAIL	AR-09
11	STAIR DETAIL	AR-10

ADDITION & REVISION

ADD./REV. NO.	DATE	DESCRIPTION	DES. BY	CHK. BY	APP. BY

DESIGNER:

NEW VISION ENGINEERING CONSULTANT
Head Office: Office No.B-6 Second Floor Masood Arcade
IJP Road Islamabad.
Ph: +92-51-4848375, Fax: +92-51-4848375
Email: newvisionec@yahoo.com

Regional Office: 287-A Street # 6, Cavalry Ground ,Lahore
Ph: +92-42-37250130

PROJECT:
"PROVISION OF MISSING FACILITIES FOR THE SHAIKH AYAZ UNIVERSITY SHIKARPUR"

TITLE:
LIST OF DRAWING

CLIENT:
SHAIKH AYAZ UNIVERSITY SHIKARPUR

DESIGNED BY: AR.SALMAN	APPROVED BY:	DATE : MAR, 2022
DRAWN BY: RIZWAN	JOB NO.	SCALE: N.T.S
DRG. NO. LS-00		

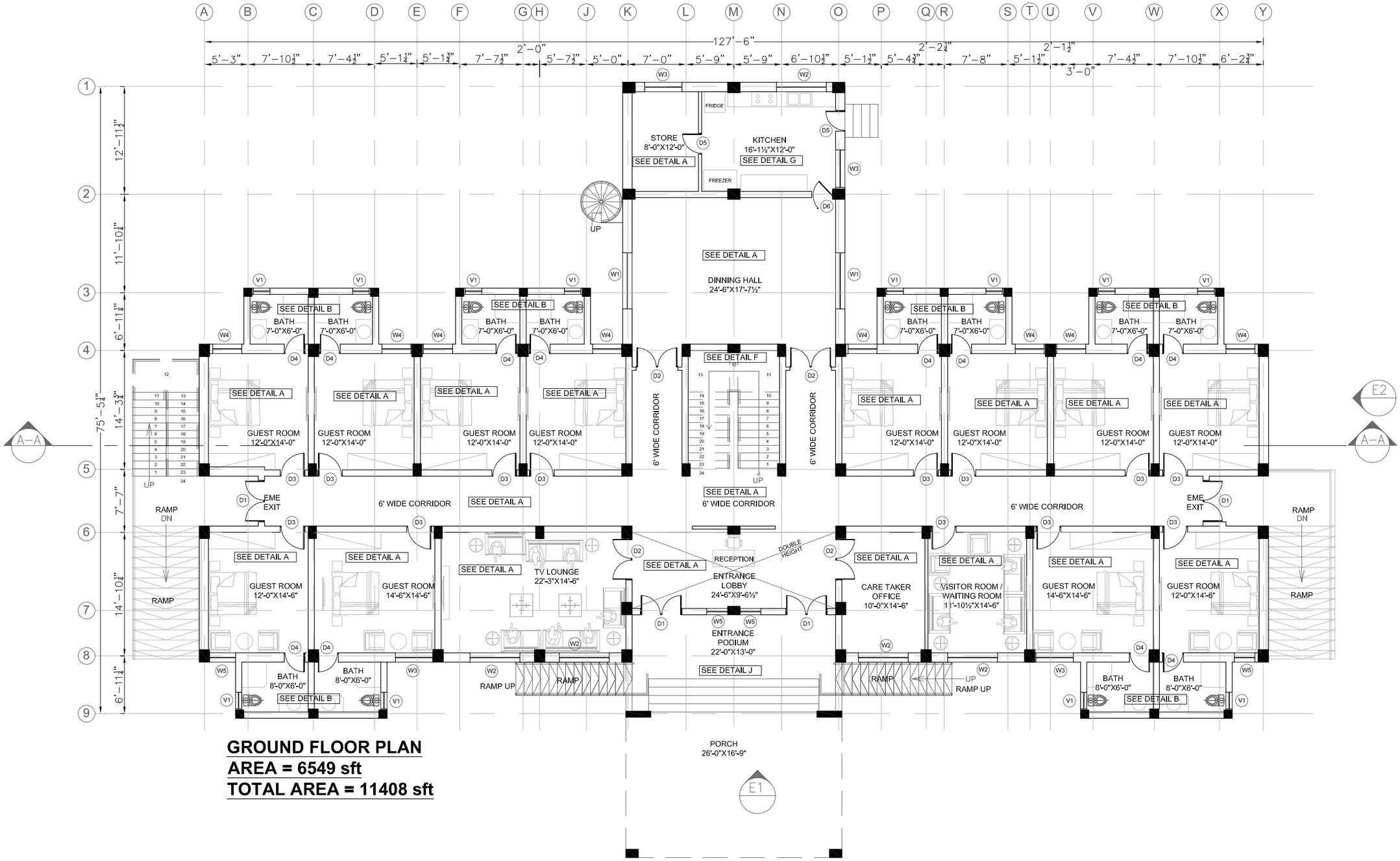

GROUND FLOOR PLAN
AREA = 6549 sft
TOTAL AREA = 11408 sft

ADDITION & REVISION					
01	7/10/2021	REVISED PLAN			
ADD./REV. NO.	DATE	DESCRIPTION	DES. BY	CHK. BY	APP. BY

DESIGNER:

NEW VISION ENGINEERING CONSULTANT
Head Office: Office No.B-6 Second Floor Masood Arcade
IJP Road Islamabad.
Ph: +92-51-4848375, Fax: +92-51-4848375
Email: newvisionec@yahoo.com

Regional Office: 287-A Street # 6, Cavalry Ground ,Lahore
Ph: +92-42-37250130

PROJECT:
"PROVISION OF MISSING FACILITIES FOR THE SHAIKH AYAZ UNIVERSITY SHIKARPUR"

TITLE:
GROUND FLOOR PLAN

CLIENT:
SHAIKH AYAZ UNIVERSITY SHIKARPUR

DESIGNED BY: AR.SALMAN	APPROVED BY:	DATE : MAR, 2022
DRAWN BY: SUFYAN	JOB NO.	SCALE: N.T.S
DRG. NO. AR-01		

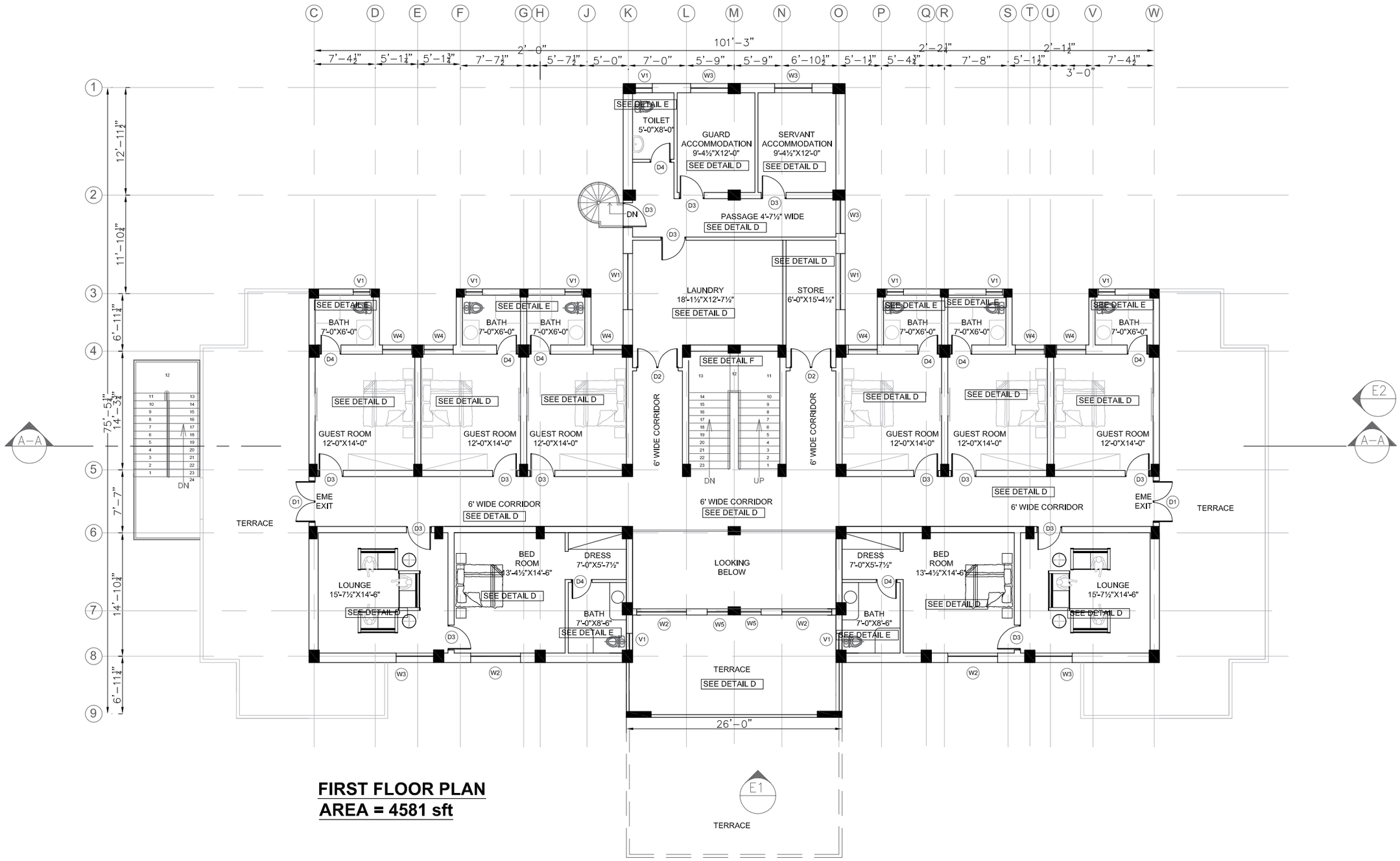

FIRST FLOOR PLAN
AREA = 4581 sft

ADDITION & REVISION					
ADD./REV. NO.	DATE	DESCRIPTION	DES. BY	CHK. BY	APP. BY

DESIGNER:

NEW VISION ENGINEERING CONSULTANT
Head Office: Office No.B-6 Second Floor Masood Arcade
IJP Road Islamabad.
Ph: +92-51-4848375, Fax: +92-51-4848375
Email: newvisionec@yahoo.com

Regional Office: 287-A Street # 6, Cavalry Ground ,Lahore
Ph: +92-42-37250130

PROJECT: "PROVISION OF MISSING FACILITIES FOR THE SHAIKH AYAZ UNIVERSITY SHIKARPUR"

TITLE: FIRST FLOOR PLAN

CLIENT: SHAIKH AYAZ UNIVERSITY SHIKARPUR

DESIGNED BY: AR.SALMAN	APPROVED BY:	DATE : MAR, 2022
DRAWN BY: SUFYAN	JOB NO.	SCALE: N.T.S
DRG. NO. AR-02		

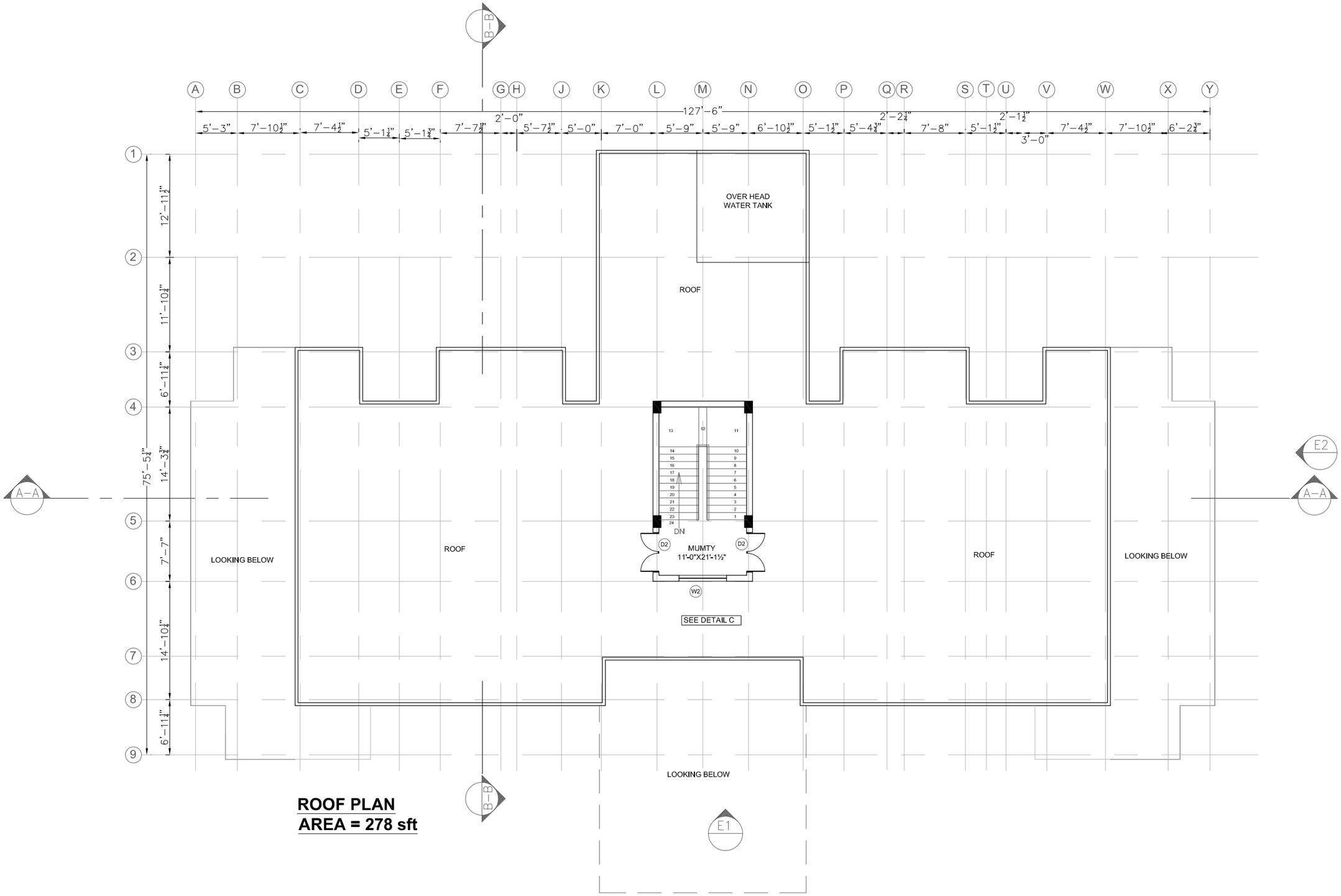

ROOF PLAN
AREA = 278 sft

ADDITION & REVISION					
ADD./REV. NO.	DATE	DESCRIPTION	DES. BY	CHK. BY	APP. BY

DESIGNER:

NEW VISION ENGINEERING CONSULTANT
Head Office: Office No.B-6 Second Floor Masood Arcade
IJP Road Islamabad.
Ph: +92-51-4848375, Fax: +92-51-4848375
Email: newvisionec@yahoo.com

Regional Office: 287-A Street # 6, Cavalry Ground ,Lahore
Ph: +92-42-37250130

PROJECT:
"PROVISION OF MISSING FACILITIES FOR THE SHAIKH AYAZ UNIVERSITY SHIKARPUR"

TITLE:
ROOF PLAN

CLIENT:
SHAIKH AYAZ UNIVERSITY SHIKARPUR

DESIGNED BY: AR.SALMAN	APPROVED BY:	DATE : MAR, 2022
DRAWN BY: SUFYAN	JOB NO.	SCALE: N.T.S
DRG. NO. AR-03		

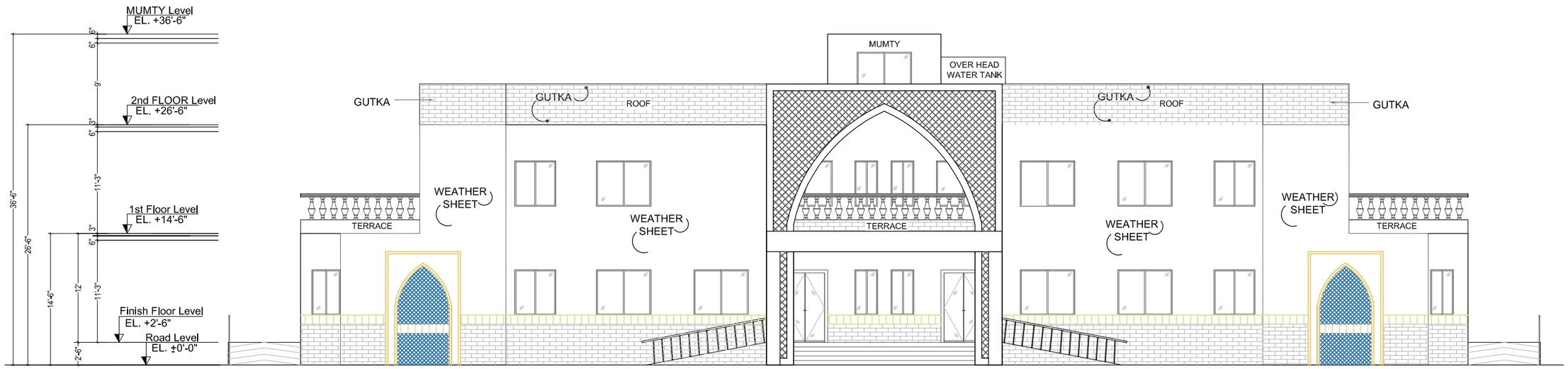

E1 ELEVATION E1

ADDITION & REVISION					
ADD./REV. NO.	DATE	DESCRIPTION	DES. BY	CHK. BY	APP. BY

DESIGNER:

NEW VISION ENGINEERING CONSULTANT
Head Office: Office No.B-6 Second Floor Masood Arcade
IJP Road Islamabad.
Ph: +92-51-4848375, Fax: +92-51-4848375
Email: newvisionec@yahoo.com

Regional Office: 287-A Street # 6, Cavalry Ground ,Lahore
Ph: +92-42-37250130

PROJECT:
"PROVISION OF MISSING FACILITIES FOR THE SHAIKH AYAZ UNIVERSITY SHIKARPUR"

TITLE:
ELEVATION E-1

CLIENT:
SHAIKH AYAZ UNIVERSITY SHIKARPUR

DESIGNED BY: AR.SALMAN	APPROVED BY:	DATE : MAR, 2022
DRAWN BY: SUFYAN	JOB NO.	SCALE: N.T.S
DRG. NO. AR-04		

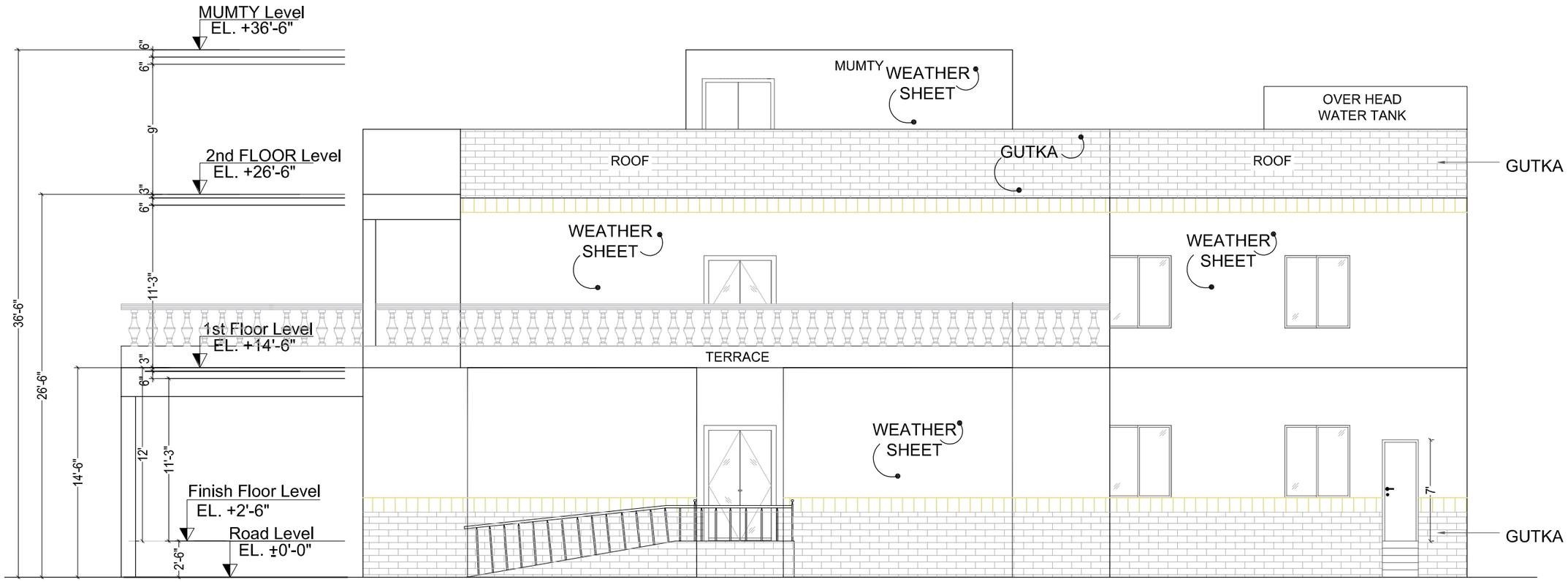

E2 ELEVATION E2

ADDITION & REVISION					
ADD./REV. NO.	DATE	DESCRIPTION	DES. BY	CHK. BY	APP. BY

DESIGNER:

NEW VISION ENGINEERING CONSULTANT
Head Office: Office No.B-6 Second Floor Masood Arcade
IJP Road Islamabad.
Ph: +92-51-4848375, Fax: +92-51-4848375
Email: newvisionec@yahoo.com

Regional Office: 287-A Street # 6, Cavalry Ground ,Lahore
Ph: +92-42-37250130

PROJECT:
"PROVISION OF MISSING FACILITIES FOR THE SHAIKH AYAZ UNIVERSITY SHIKARPUR"

TITLE:
ELEVATION E-2

CLIENT:
SHAIKH AYAZ UNIVERSITY SHIKARPUR

DESIGNED BY: AR.SALMAN	APPROVED BY:	DATE : MAR, 2022
DRAWN BY: SUFYAN	JOB NO.	SCALE: N.T.S
DRG. NO. AR-05		

SCHEDULE OF OPENINGS

S.NO.	OPENINGS	DIMENSIONS	SILL LEVEL	REMARKS
1	D1	5'-0"x8'-0"	0'-0"	ALUMINUM GLASS DOOR
2	D2	5'-0"X7'-0"	0'-0"	SOLID WOOD DOOR
3	D3	3'-0"X7'-0"	0'-0"	SOLID WOOD DOOR
4	D4	2'-6"X7'-0"	0'-0"	UPVC DOOR
5	D5	2'-6"X7'-0"	0'-0"	SOLID FLUSH DOOR
6	D6	2'-6"X7'-0"	0'-0"	REVOLVING DOOR
7	W1	6'-9"X5'-0"	+3'-0"	ALUMINUM WINDOW
8	W2	6'-0"X5'-0"	+3'-0"	ALUMINUM WINDOW
9	W3	4'-6"X5'-0"	+3'-0"	ALUMINUM WINDOW
10	W4	3'-6"X5'-0"	+3'-0"	ALUMINUM WINDOW
11	W5	2'-6"X5'-0"	+3'-0"	ALUMINUM WINDOW
12	V1	2'-0"X2'-0"	+6'-0"	ALUMINUM WINDOW

ADDITION & REVISION

ADD./REV. NO.	DATE	DESCRIPTION	DES. BY	CHK. BY	APP. BY

DESIGNER:

NEW VISION ENGINEERING CONSULTANT
Head Office: Office No.B-6 Second Floor Masood Arcade
IJP Road Islamabad.
Ph: +92-51-4848375, Fax: +92-51-4848375
Email: newvisionec@yahoo.com

Regional Office: 287-A Street # 6, Cavalry Ground ,Lahore
Ph: +92-42-37250130

PROJECT:
"PROVISION OF MISSING FACILITIES FOR THE SHAIKH AYAZ UNIVERSITY SHIKARPUR"

TITLE:
DOOR & WINDOW SCHEDULE

CLIENT:
SHAIKH AYAZ UNIVERSITY SHIKARPUR

DESIGNED BY: AR.SALMAN	APPROVED BY:	DATE : MAR, 2022
DRAWN BY: SUFYAN	JOB NO.	SCALE: N.T.S
DRG. NO. AR-06		

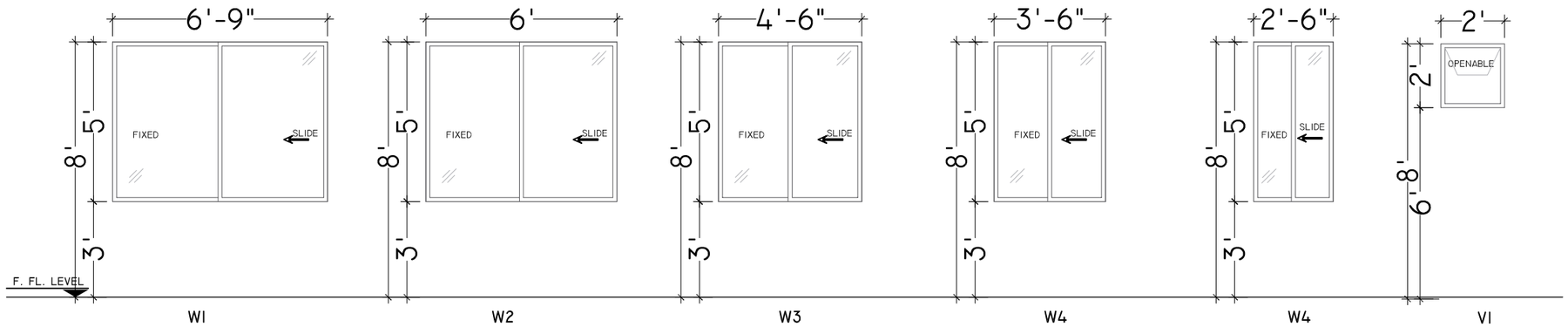

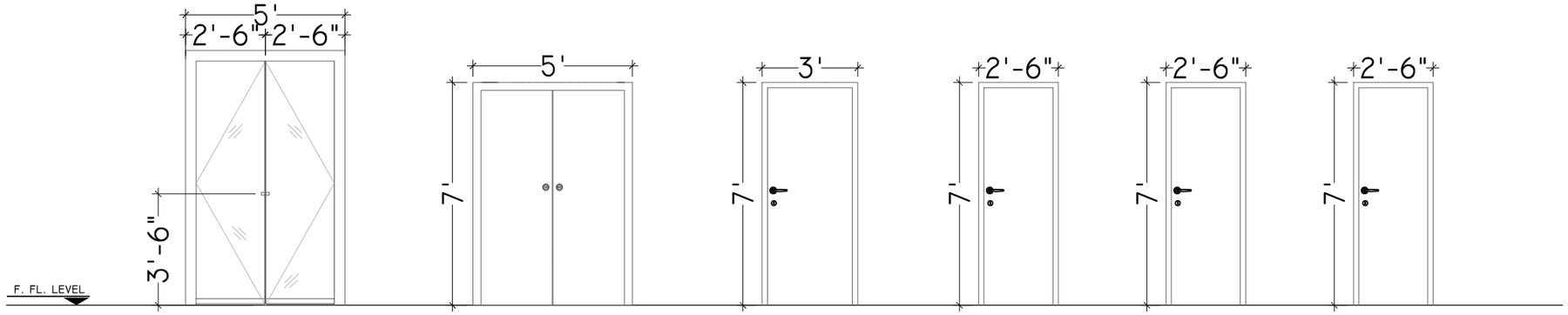

D1
ALUMINUM GLASS DOOR

D2
SOLID WOOD DOOR

D3
SOLID WOOD DOOR

D4
UPVC DOOR

D5
SOLID FLUSH DOOR

D6
REVOLVING DOOR

ADDITION & REVISION					
ADD./REV. NO.	DATE	DESCRIPTION	DES. BY	CHK. BY	APP. BY

DESIGNER:

NEW VISION ENGINEERING CONSULTANT
Head Office: Office No.B-6 Second Floor Masood Arcade
IJP Road Islamabad.
Ph: +92-51-4848375, Fax: +92-51-4848375
Email: newvisionec@yahoo.com

Regional Office: 287-A Street # 6, Cavalry Ground ,Lahore
Ph: +92-42-37250130

PROJECT:
"PROVISION OF MISSING FACILITIES FOR THE SHAIKH AYAZ UNIVERSITY SHIKARPUR"

TITLE:
DOOR & WINDOW ELEVATION

CLIENT:
SHAIKH AYAZ UNIVERSITY SHIKARPUR

DESIGNED BY: AR.SALMAN	APPROVED BY:	DATE : MAR, 2022
DRAWN BY: SUFYAN	JOB NO.	SCALE: N.T.S
DRG. NO. AR-07		

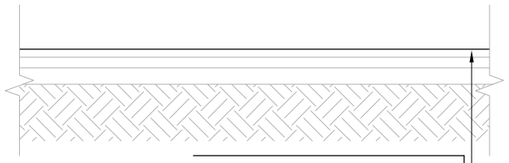

DETAIL - A
FLOOR+ROOMS

PORCELAIN TILE 24"X24"X3/8"
2" P.C.C 1:2:4
4" THICK HARDCORE
4" THICK SAND FILLING
COMPACTED EARTH UP TO 95%
COMPACTION AS PER
MODIFIED PROCTOR AASHTO

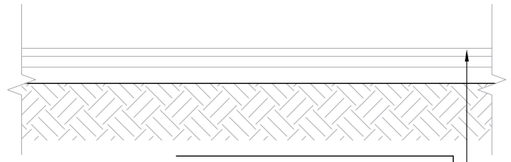

DETAIL - B
BATH

12"x18"x3/8" CERAMIC TILE
2" P.C.C 1:2:4
4" THICK HARDCORE
4" THICK SAND FILLING
COMPACTED EARTH UP TO 95%
COMPACTION AS PER
MODIFIED PROCTOR AASHTO

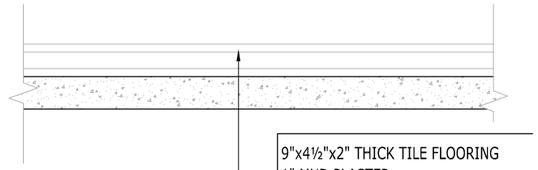

DETAIL - C
ROOF

9"x4½"x2" THICK TILE FLOORING
1" MUD PLASTER
ONE LAYER OF POLYTHENE SHEET .13mm SWG
4" EARTH FILLING PUDLED
ONE LAYER OF POLYTHENE SHEET .13mm SWG
BITUMEN LAYER
R.C.C SLAB

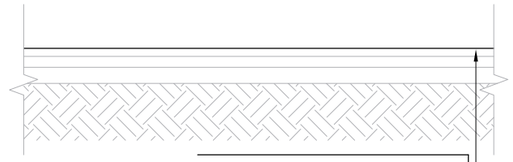

DETAIL - G
KITCHEN

12"x18"x3/8" TILE
2" P.C.C 1:2:4
4" THICK HARDCORE
4" THICK SAND FILLING
COMPACTED EARTH UP TO 95%
COMPACTION AS PER
MODIFIED PROCTOR AASHTO

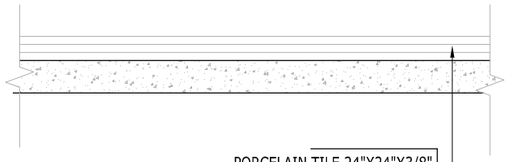

DETAIL - D
FLOOR+ROOMS

PORCELAIN TILE 24"X24"X3/8"
2" P.C.C 1:2:4
R.C.C SLAB

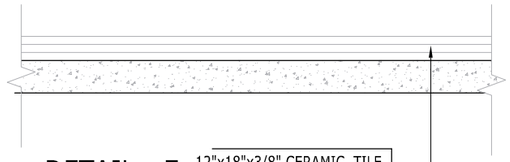

DETAIL - E
BATH

12"x18"x3/8" CERAMIC TILE
¾" CEMENT SAND MORTER
2" P.C.C 1:2:4
R.C.C SLAB

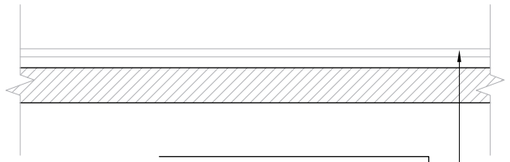

SIZE AS PER STEPS BLACK GRANITE MARBLE
3/4" CEMENT SAND MORTAR(1:2)
BRICK WORK

DETAIL - F
STAIR

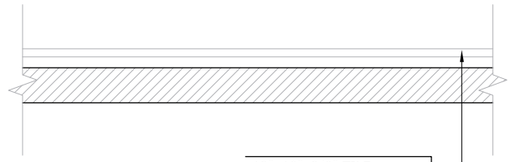

DETAIL - H
KITCHEN

12"x18"x3/8" TILE
¾" CEMENT SAND MORTER
2" P.C.C 1:2:4
R.C.C SLAB

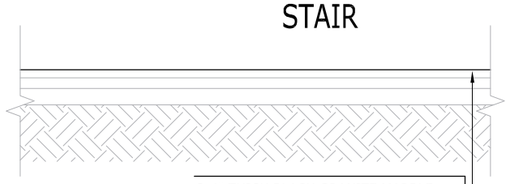

DETAIL - J
PODIUM

3/4" THICK BLACK GRANITE MARBLE
2" P.C.C 1:2:4
4" THICK HARDCORE
4" THICK SAND FILLING
COMPACTED EARTH UP TO 95%
COMPACTION AS PER
MODIFIED PROCTOR AASHTO

ADDITION & REVISION					
ADD./REV. NO.	DATE	DESCRIPTION	DES. BY	CHK. BY	APP. BY

DESIGNER:

NEW VISION ENGINEERING CONSULTANT
Head Office: Office No.B-6 Second Floor Masood Arcade
IJP Road Islamabad.
Ph: +92-51-4848375, Fax: +92-51-4848375
Email: newvisionec@yahoo.com

Regional Office: 287-A Street # 6, Cavalry Ground ,Lahore
Ph: +92-42-37250130

PROJECT:
"PROVISION OF MISSING FACILITIES FOR THE SHAIKH AYAZ UNIVERSITY SHIKARPUR"

TITLE:
FLOOR FINISH DETAIL

CLIENT:
SHAIKH AYAZ UNIVERSITY SHIKARPUR

DESIGNED BY: AR.SALMAN	APPROVED BY:	DATE : MAR, 2022
DRAWN BY: SUFYAN	JOB NO.	SCALE: N.T.S
DRG. NO. AR-08		

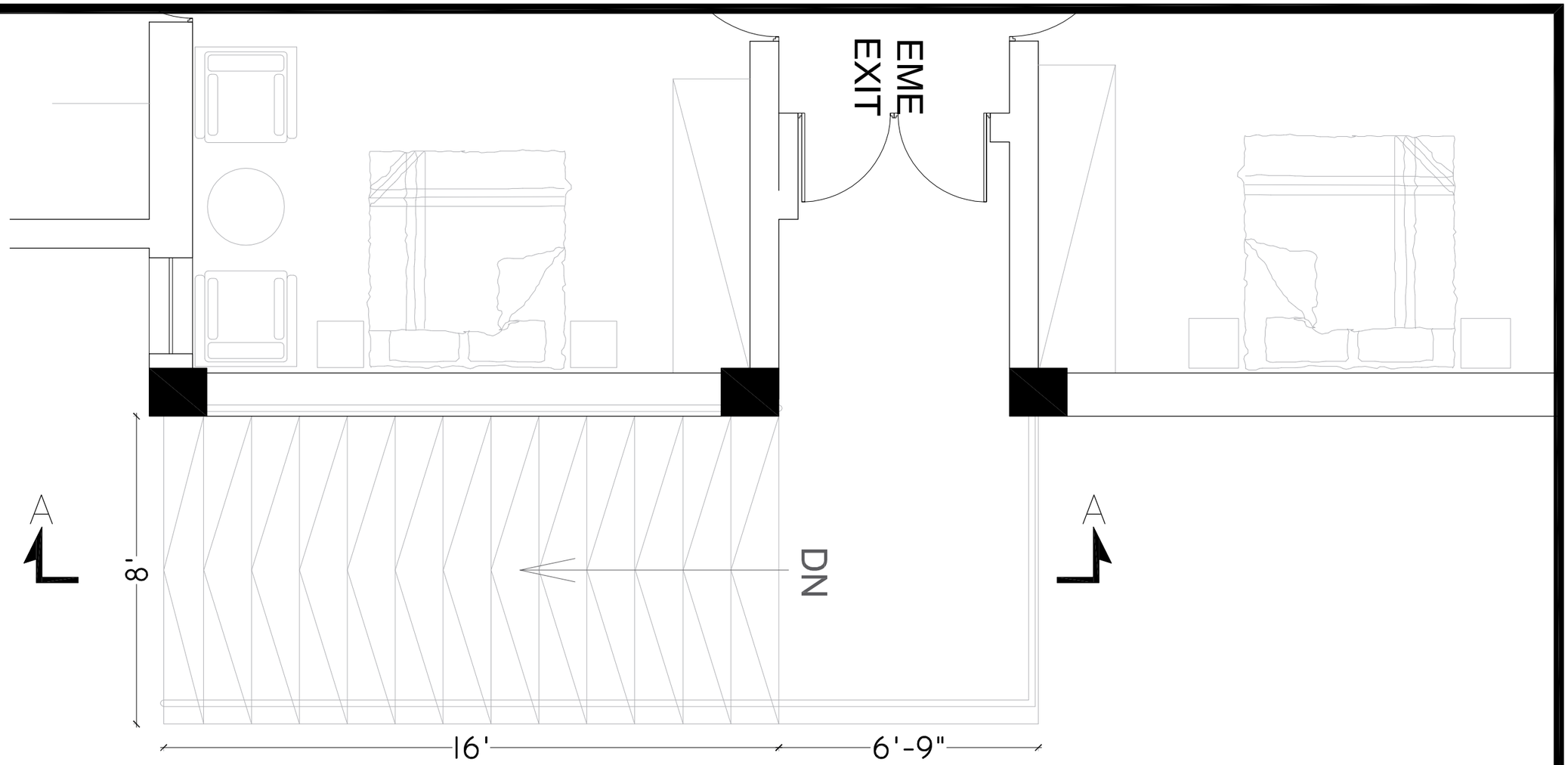

RAMP PLAN
SLOPE 1:16

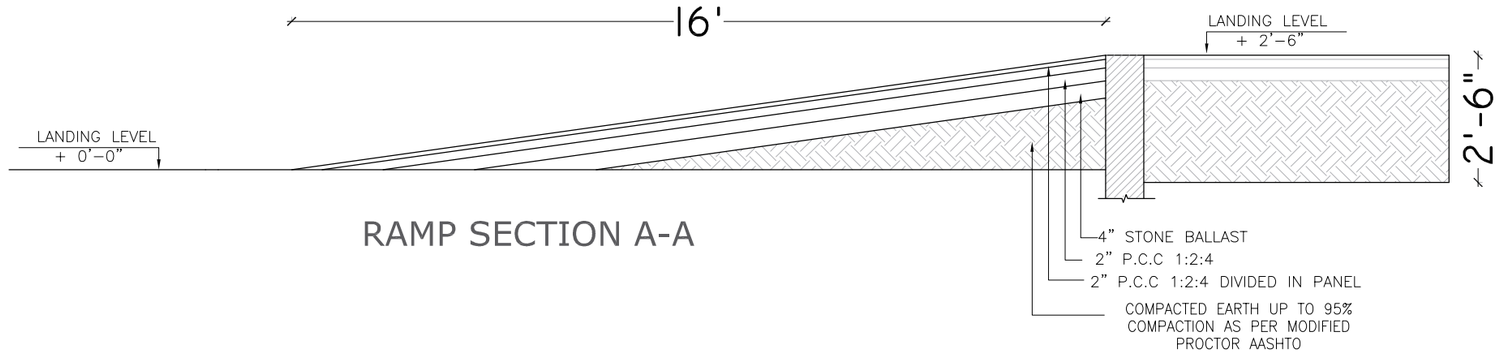

RAMP SECTION A-A

ADDITION & REVISION					
ADD./REV. NO.	DATE	DESCRIPTION	DES. BY	CHK. BY	APP. BY

DESIGNER:

NEW VISION ENGINEERING CONSULTANT
Head Office: Office No.B-6 Second Floor Masood Arcade
IJP Road Islamabad.
Ph: +92-51-4848375, Fax: +92-51-4848375
Email: newvisionec@yahoo.com
Regional Office: 287-A Street # 6, Cavalry Ground ,Lahore
Ph: +92-42-37250130

PROJECT: "PROVISION OF MISSING FACILITIES FOR THE SHAIKH AYAZ UNIVERSITY SHIKARPUR"

TITLE: **RAMP DETAIL**

CLIENT: SHAIKH AYAZ UNIVERSITY SHIKARPUR

DESIGNED BY: AR.SALMAN	APPROVED BY:	DATE : MAR, 2022
DRAWN BY: SUFYAN	JOB NO.	SCALE: N.T.S
DRG. NO. AR-09		

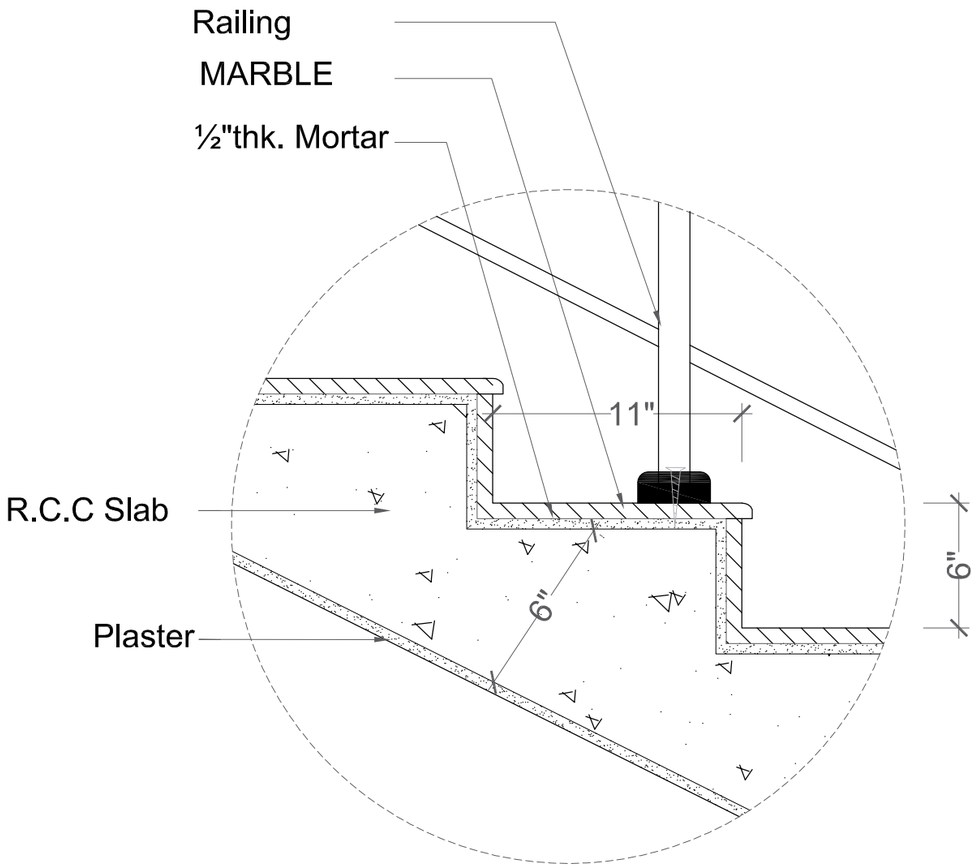

DETAIL "A"

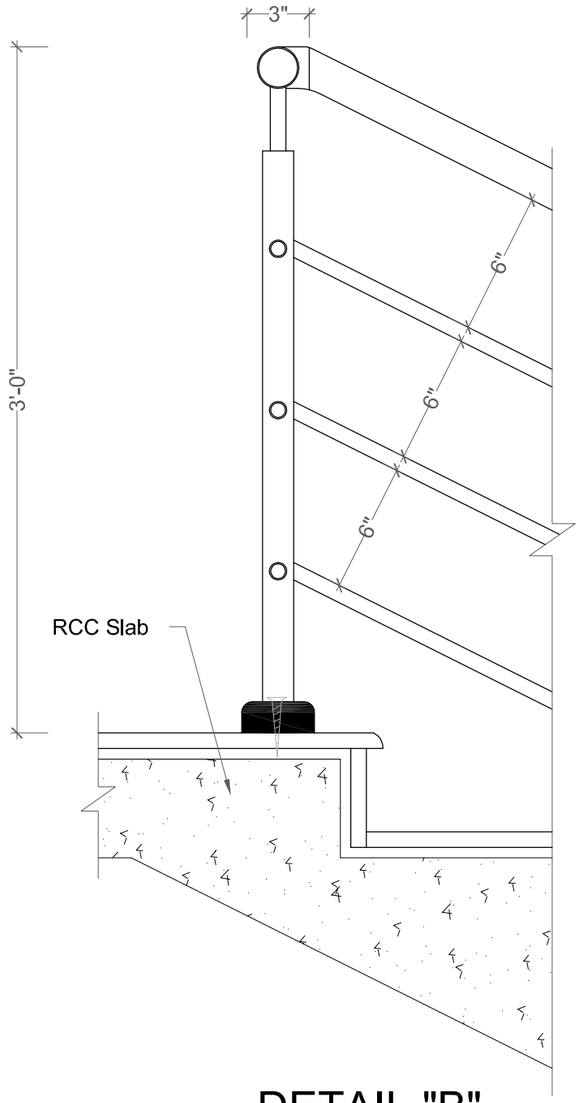

DETAIL "B"

ADDITION & REVISION					
ADD./REV. NO.	DATE	DESCRIPTION	DES. BY	CHK. BY	APP. BY

DESIGNER:

NEW VISION ENGINEERING CONSULTANT
Head Office: Office No.B-6 Second Floor Masood Arcade
IJP Road Islamabad.
Ph: +92-51-4848375, Fax: +92-51-4848375
Email: newvisionec@yahoo.com

Regional Office: 287-A Street # 6, Cavalry Ground ,Lahore
Ph: +92-42-37250130

PROJECT:
"PROVISION OF MISSING FACILITIES FOR THE SHAIKH AYAZ UNIVERSITY SHIKARPUR"

TITLE:
STAIR DETAIL

CLIENT:
SHAIKH AYAZ UNIVERSITY SHIKARPUR

DESIGNED BY: AR.SALMAN	APPROVED BY:	DATE : MAR, 2022
DRAWN BY: SUFYAN	JOB NO.	SCALE: N.T.S
DRG. NO. AR-10		

STRUCTURE

L I S T O F D R A W I N G S

S.NO.	DRAWING NO	DESCRIPTION	REMARKS
		TITLE SHEET	
		STRUCTURAL	
1	ST-00	LIST OF DRAWINGS	
2	ST-01	GENERAL NOTES	
3	ST-02	TYPICAL DETAIL	
4	ST-03	TYPICAL DETAIL	
5	ST-04	TYPICAL DETAIL	
6	ST-05	FOUNDATION LAYOUT PLAN	
7	ST-06	FOUNDATION REINFORCEMENT DETAIL	
8	ST-07	FOUNDATION SECTION DETAIL	
9	ST-07a	FOUNDATION SECTION DETAIL	
10	ST-08	BRICK MASONRY FOUNDATION LAYOUT	
11	ST-09	BRICK MASONRY FOUNDATION SECTION DETAIL	
12	ST-10	COLUMN LAYOUT PLAN	
13	ST-11	COLUMN SECTION DETAIL	
14	ST-12	PLINTH BEAMS LAYOUT PLAN	
15	ST-13	PLINTH BEAMS SECTION DETAIL	
16	ST-14	GROUND FLOOR BEAM LAYOUT PLAN	
17	ST-15	FIRST FLOOR BEAM LAYOUT PLAN	
18	ST-16	MUMTY BEAM LAYOUT PLAN	
19	ST-17	GROUND FLOOR BEAM SECTION DETAIL	
20	ST-18	FIRST FLOOR BEAM SECTION DETAIL	
21	ST-19	MUMTY BEAM SECTION DETAIL	
22	ST-20	GROUND FLOOR SLAB LAYOUT POSITIVE REINFORCEMENT	
23	ST-21	FIRST FLOOR SLAB LAYOUT POSITIVE REINFORCEMENT	
24	ST-22	MUMTY SLAB LAYOUT POSITIVE REINFORCEMENT	
25	ST-23	GROUND FLOOR SLAB LAYOUT NEGATIVE REINFORCEMENT	
26	ST-24	FIRST FLOOR SLAB LAYOUT NEGATIVE REINFORCEMENT	
27	ST-25	MUMTY SLAB LAYOUT NEGATIVE REINFORCEMENT	

S.NO.	DRAWING NO	DESCRIPTION	REMARKS
28	ST-26	TYPICAL STAIR DETAIL	
29	ST-27	**O.H.W.TANK DETAIL-1**	
30	ST-28	**O.H.W.TANK DETAIL-2**	

ADDITION & REVISION

ADD./REV. NO.	DATE	DESCRIPTION	DES. BY	CHK. BY	APP. BY

DESIGNER:

NEW VISION ENGINEERING CONSULTANT
Head Office: Office No.B-6 Second Floor Masood Arcade
IJP Road Islamabad.
Ph: +92-51-4848375, Fax: +92-51-4848375
Email: newvisionec@yahoo.com

Regional Office: 287-A Street # 6, Cavalry Ground ,Lahore
Ph: +92-42-37250130

PROJECT:
"PROVISION OF MISSING FACILITIES FOR THE SHAIKH AYAZ UNIVERSITY SHIKARPUR"

TITLE OF DRAWING:
LIST OF DRAWINGS

CLIENT:
SHAIKH AYAZ UNIVERSITY SHIKARPUR

DESIGNED BY: AK	APPROVED BY: MR	DATE. MARCH, 2022
DRAWN BY: RIZ	JOB NO.	SCALE: AS SHOWN
CHECKED BY: MF	DRG. NO. ST-00	

STRUCTURAL NOTES

GENERAL TECHNICAL NOTES

1. Figured dimensions are to be followed.
2. Class "A" kiln burnt brick with minimum crushing strength of 2000 PSI should be used & joint at end should be sloppy, Vertical toothed joint at corners are prohibited.
3. A steel G-60 deformed steel should be used in beams footing slabs and water retaining structures, in columns, for all diameters.
4. All steel should be checked for its quality and placement DETAIL as shown in drawings.
5. Extra care is required for proper placement of top reinforcement at support sections and cantilevers.
6. Dotted bars designate top reinforcement.
7. Provide L- shaped end hooks for all bars at discontinuous ends in footings, walls, beams and slabs as shown in drawings.
8. Lap length should be followed As except specified:-
   (a) 1" Ø = 60"
   (b) 3/4" Ø = 45"
   (c) 5/8" Ø = 36"
   (d) 1/2" Ø = 30"
   (e) 3/8" Ø = 23"

09. Provide 3/8" dia at 12" c/c as distribution steel if not shown in drawings.

10. Minimum concrete cover.
    a) Footing = 2"
    b) Slabs = 3/4"
    c) Beams = 1½"
    d) Columns = 1½"
    e) Water tank and retaining wall
    i- Water/earth face or exposed to weather = 2"
    ii- Other faces = 1"

11. All footing should be taken below the original Ground Level to achieve the minimum depth as shown in drawings. Footing should not be placed on uncompacted fill area.
12. All drawings should be read in conjunction with Architectural Drawings.
13. Contractor will co-ordinate all drawings such as architectural, structural, electrical, mechanical, water supply, drainage etc: before execution of work.
14. Standard ACI 318, Astm C 33 and Astm A-615 use for structural concrete
15. Fine modulus of fine aggregate varies from 2- 3.5mm
    For concrete use 2.9- 3.2mm
    For plaster use 2.2- 3.6mm

QUALITY OF CONCRETE

1. FOOTINGS & RETAINING WALLS.
   Minimum concrete compressive strength for 6"x12" cylinder to be 3000 psi at 28 days age. Concrete Nominal Mix 1:2:4 or more rich to provide specified strength (Equivalent 6"x6"x6" cube strength 3750 psi)

2. COLUMNS.
   Minimum concrete compressive strength for 6"x12" cylinder to be 4000 psi at 28 days age. Concrete Nominal Mix to be 1:1½:3 or more rich to provide specified strength

3. BEAMS, RIBS & SLABS.
   Minimum concrete compressive strength for 6"x12" cylinder to be 3000 psi at 28 days age.Concrete Nominal Mix to be 1:2:4 or more rich to provide specified strength (Equivalent 6"x6"x6" cube strength 3750 psi)
4. Use of plasticizers recommended to reduce the water cement ratio and increase workability of concrete.
5. All concrete mixes to be used, should be got designed & approved before execution of work.
6. Quality, size and gradation of aggregates (fine & course) as used during the mix design, should be strictly adhered with.
7. The Design is in accordance with Seismic Zone 2A.

NOTES

1. ALL LAYOUT DIMENSIONS AND F.FLOOR LEVELS TO BE AS PER ARCH DRAWING.
2. PROVIDE PLINTH BEAM PB AT PLINTH LEVEL, WALL BEAMS AT SLAB LEVEL.
3. PROVIDE #2 DOUBLE-LEG TIE BARS AT 12" CENTRES AT COMMON JOINT BETWEEN WALLS AND COLUMNS. THESE BARS SHOULD PASS INTO WALLS ON EACH SIDE OF COLUMNS.

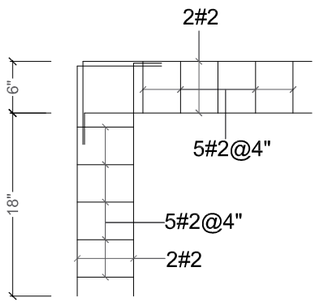

PLAN OF BRICK WALL TIE FOR CORNER JOINT

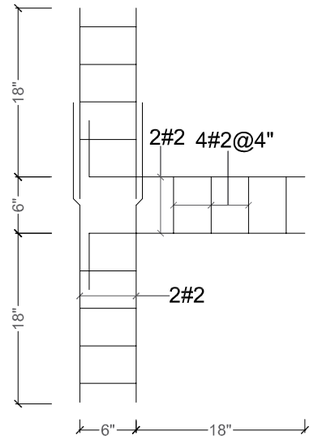

PLAN OF BRICK WALL TIE FOR T- JOINT

REINFORCING STEEL

REINFORCING STEEL f_y = 60,000 psi			
BAR NO.	BAR DIA (IN.)	DEVELOPMENT LENGTH (INCH) IN TENSION	
		f'_c= 3000 psi	f'_c= 4000 psi
#3	0.375	17"	15"
#4	0.500	22"	19"
#5	0.625	28"	24"
#6	0.750	33"	29"
#7	0.875	48"	42"
#8	1.000	55"	48"
BAR NO.	BAR DIA (IN.)	DEVELOPMENT LENGTH (INCH) IN COMPRESSION	
		f'_c= 3000 psi	f'_c= 4000 psi
#3	0.375	9"	8"
#4	0.500	11"	10"
#5	0.625	14"	12"
#6	0.750	17"	15"
#7	0.875	20"	17"
#8	1.000	22"	19"
BAR NO.	BAR DIA (IN.)	SPLICE LENGTH (INCH) IN TENSION	
		f'_c= 3000 psi	f'_c= 4000 psi
#3	0.375	22"	20"
#4	0.500	29"	25"
#5	0.625	37"	32"
#6	0.750	43"	38"
#7	0.875	63"	55"
#8	1.000	72"	63"

REINFORCING STEEL f_y = 40,000 psi			
BAR NO.	BAR DIA (IN.)	DEVELOPMENT LENGTH (INCH) IN TENSION	
		f'_c= 3000 psi	f'_c= 4000 psi
#3	0.375	12"	12"
#4	0.500	15"	13"
#5	0.625	19"	17"
#6	0.750	23"	20"
#7	0.875	33"	28"
#8	1.000	37"	32"

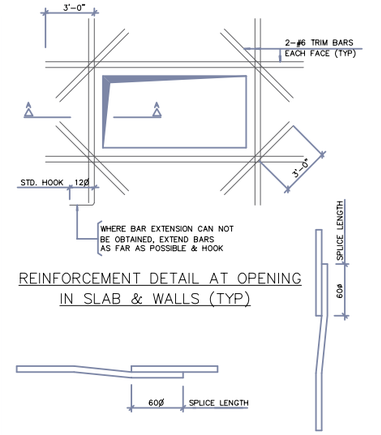

REINFORCEMENT DETAIL AT OPENING IN SLAB & WALLS (TYP)

BEAM SPLICE (TYP)

COLUMN SPLICE (TYP)

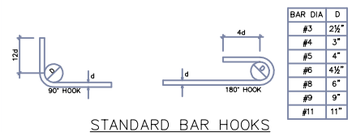

BAR DIA	D
#3	2½"
#4	3"
#5	4"
#6	4½"
#8	6"
#9	9"
#11	11"

STANDARD BAR HOOKS

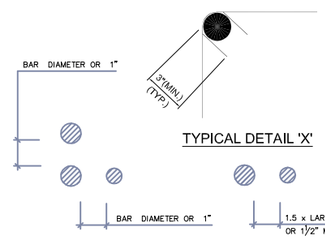

TYPICAL DETAIL 'X'

BAR SPACING IN BEAM

VERTICAL BAR SPACING

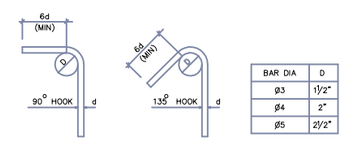

BAR DIA	D
ø3	1½"
ø4	2"
ø5	2½"

STIRRUPS AND TIE HOOKS

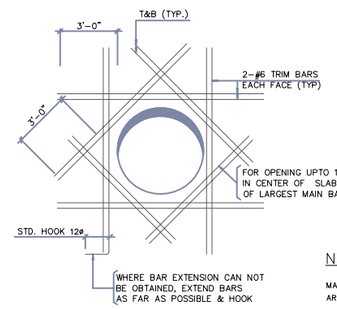

NOTES

MAXIMUM DIAMETER OF SLEEVE IS 1'-0", FOR TRIM BARS AROUND LARGE SLEEVE REFER TO OTHER DETAIL.

REINFORCEMENT AROUND SLEEVE IN SLAB & WALLS (TYP)

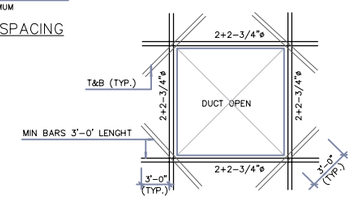

TYP. DUCT OPENING DETAIL

ADDITION & REVISION					
ADD./REV. NO.	DATE	DESCRIPTION	DES. BY	CHK. BY	APP. BY

DESIGNER:
NEW VISION ENGINEERING CONSULTANT
Head Office: Office No,B-6 Second Floor Masood Arcade IJP Road Islamabad.
Ph: +92-51-4848374, Fax: +92-51-4848375
Email: newvisionec@yahoo.com
Regional Office: House # 98/4-2,Gardan Town,lahore
Ph: +92-42-35911695, Email: newvision761@yahoo.com

PROJECT: "PROVISION OF MISSING FACILITIES FOR THE SHAIKH AYAZ UNIVERSITY SHIKARPUR"

TITLE: **GENERAL NOTES**

CLIENT: **SHAIKH AYAZ UNIVERSITY SHIKARPUR**

DESIGNED BY: ENG. AHSAN	APPROVED BY:	DATE : MARCH, 2022
DRAWN BY: RIZWAN	JOB NO.	SCALE: N.T.S
DRG. NO. ST-01		

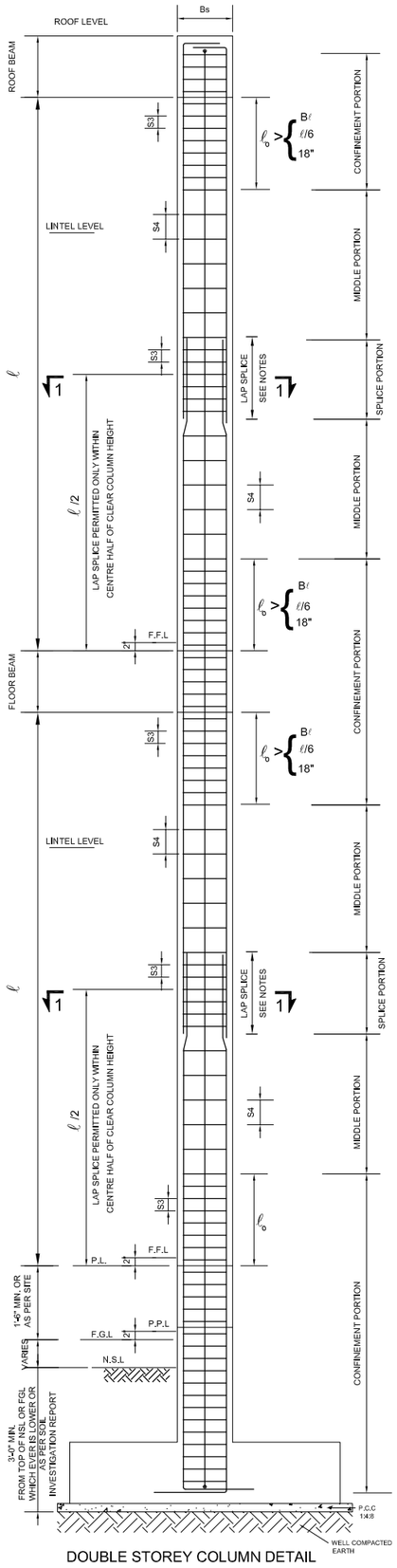

DOUBLE STOREY COLUMN DETAIL

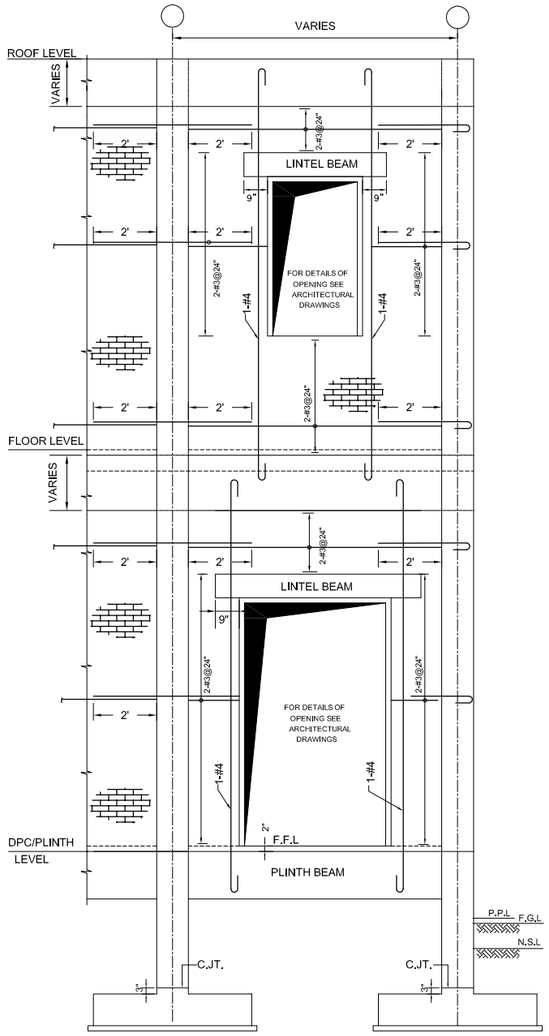

TYPICAL WALL REINFORCEMENT DETAIL WITH OPENINGS

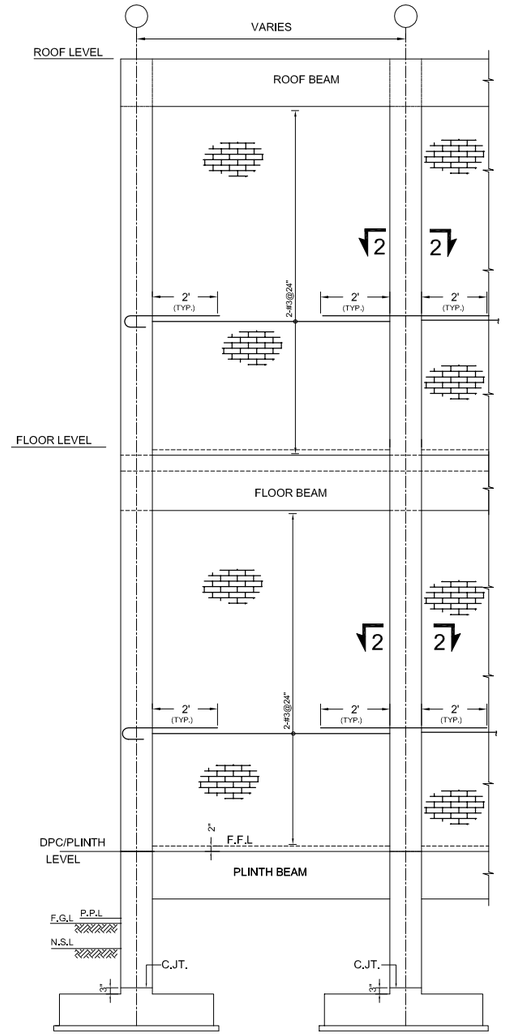

TYPICAL WALL REINFORCEMENT DETAIL

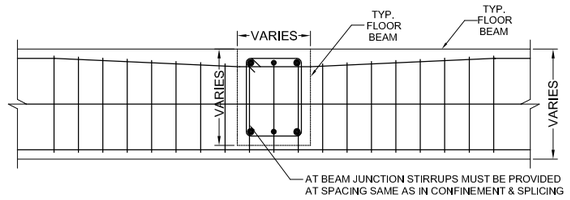

TYP. BEAM-BEAM JOINT DETAIL

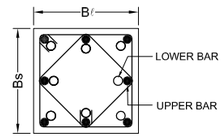

SECTION 1-1

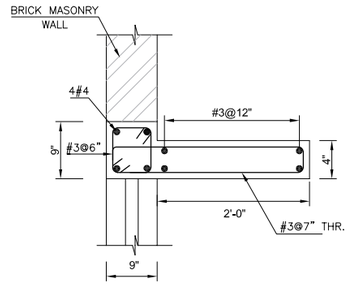

TYP. SECTION OF WINDOW SHADE

FOR LEVEL DETAILS REFER ARCHTIECTURAL DRAWINGS

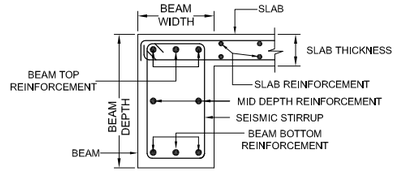

TYP. SECTION OF EXTERNAL BEAM (L-SHAPED)

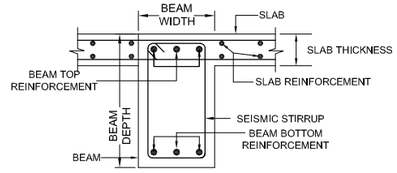

TYP. SECTION OF INTERNAL BEAM (T-SHAPED)

LEGENDS

S1	STIRRUPS SPACING IN BEAM NEAR SUPPORTS & LAP SPLICES
S2	STIRRUPS SPACING IN BEAM IN MIDSPAN
S3	CROSSTIE SPACING IN COLUMNS IN CONFINEMENT & LAP SPLICE
S4	CROSSTIE SPACING IN COLUMNS IN MIDDLE PORTION.
h	DEPTH OF BEAM
db	DIAMETER OF BAR
Bs	LEAST LATERAL DIMENSION OF COLUMN
B'	LARGEST LATERAL DIMENSION OF COLUMN
ℓ	CLEAR HEIGHT OF COLUMN
ℓo	LENGTH OF CONFINEMENT PORTION
ℓd	DEVELOPMENT LENGTH FOR STEEL BAR
d	EFFECTIVE DEPTH OF BEAM

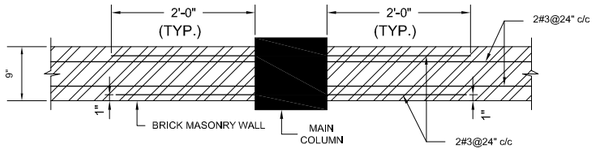

TYP. WALL & MAIN COLUMN JOINT DETAIL SECTION 2-2

ADD./REV. NO.	DATE	DESCRIPTION	DES. BY	CHK. BY	APP. BY

ADDITION & REVISION

DESIGNER:

NEW VISION ENGINEERING CONSULTANT
Head Office: Office No.B-6 Second Floor Masood Arcade IJP Road Islamabad.
Ph: +92-51-4848374, Fax: +92-51-4848375
Email: newvislonec@yahoo.com
Regional Office: House # 98/4-2,Gardan Town,lahore
Ph: +92-42-35911695, Email: newvision761@yahoo.com

PROJECT: "PROVISION OF MISSING FACILITIES FOR THE SHAIKH AYAZ UNIVERSITY SHIKARPUR"

TITLE: **TYPICAL DETAIL**

CLIENT: **SHAIKH AYAZ UNIVERSITY SHIKARPUR**

DESIGNED BY: ENG. AHSAN	APPROVED BY:	DATE : MARCH, 2022
DRAWN BY: RIZWAN	JOB NO.	SCALE: N.T.S
DRG. NO. ST-02		

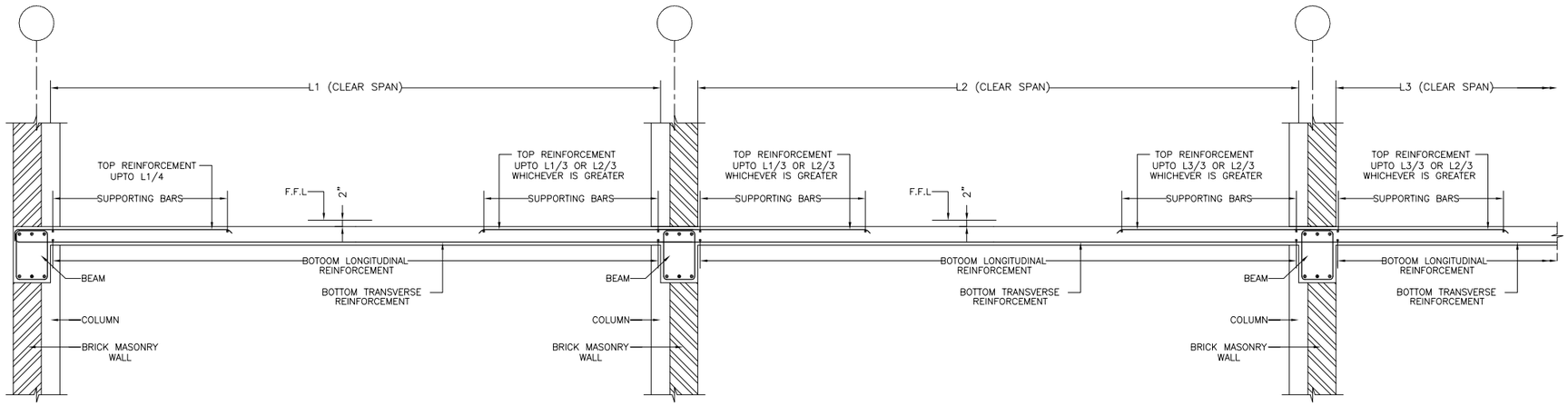

TYPICAL SECTION OF SLAB

REINFORCEMENT CURTAILMENT DETAIL

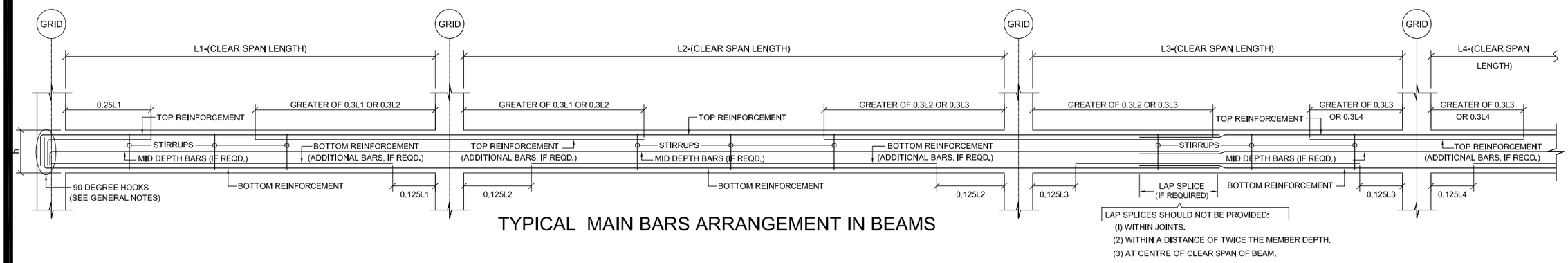

TYPICAL MAIN BARS ARRANGEMENT IN BEAMS

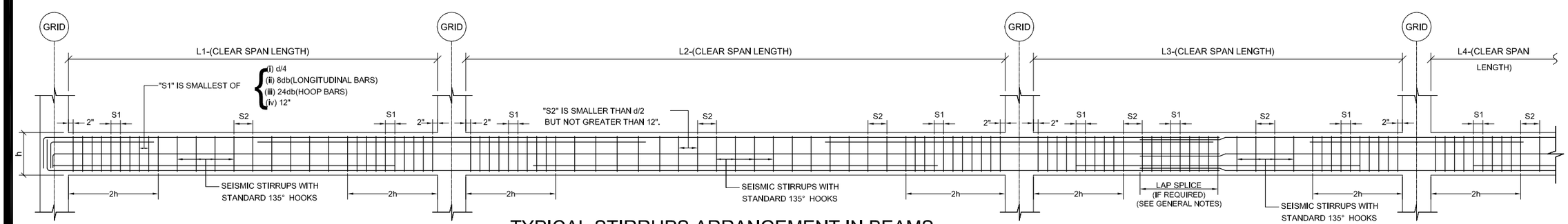

TYPICAL STIRRUPS ARRANGEMENT IN BEAMS

ADDITION & REVISION					
ADD./REV. NO.	DATE	DESCRIPTION	DES. BY	CHK. BY	APP. BY

DESIGNER:

NEW VISION ENGINEERING CONSULTANT
Head Office: Office No.B-6 Second Floor Masood Arcade IJP Road Islamabad.
Ph: +92-51-4848374, Fax: +92-51-4848375
Email: newvislonec@yahoo.com
Regional Office: House # 98/4-2,Gardan Town,lahore
Ph: +92-42-35911695, Email: newvision761@yahoo.com

PROJECT: "PROVISION OF MISSING FACILITIES FOR THE SHAIKH AYAZ UNIVERSITY SHIKARPUR"

TITLE: **TYPICAL DETAIL**

CLIENT: **SHAIKH AYAZ UNIVERSITY SHIKARPUR**

DESIGNED BY: ENG. AHSAN	APPROVED BY:	DATE : MARCH, 2022
DRAWN BY: RIZWAN	JOB NO.	SCALE: N.T.S
DRG. NO. ST-03		

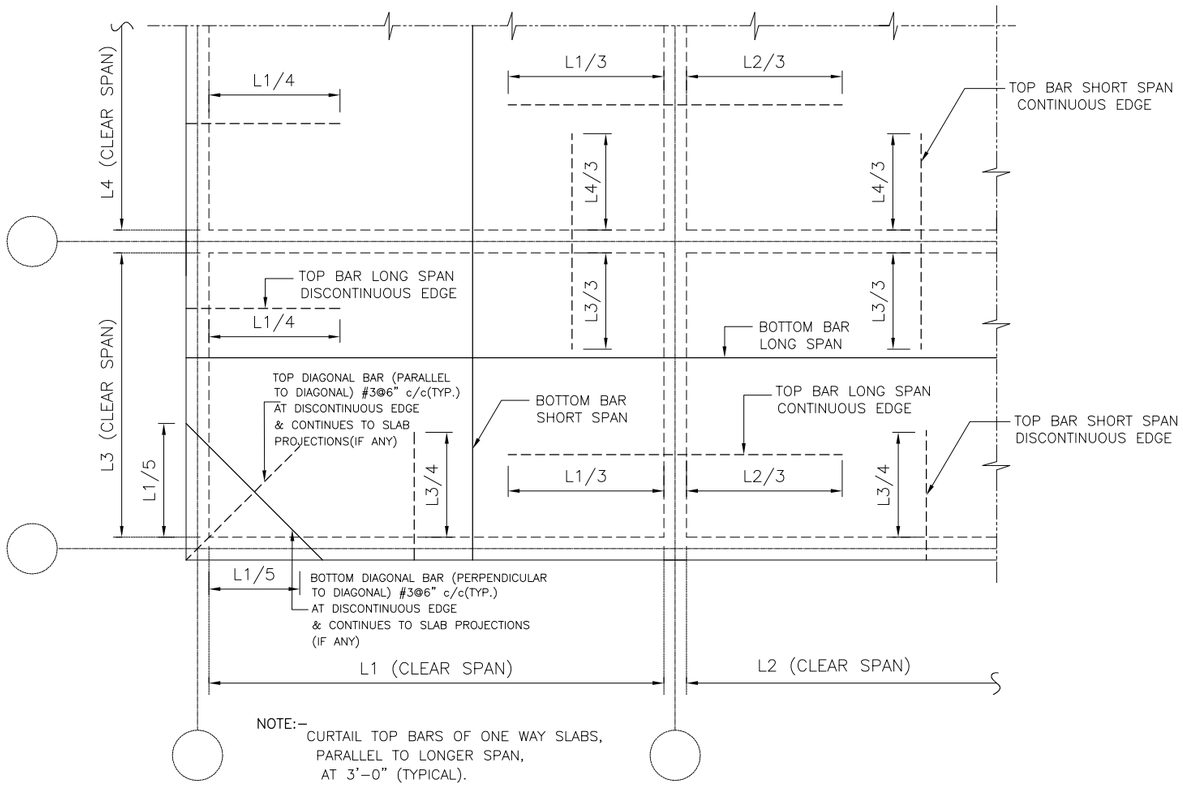

NOTE:–
CURTAIL TOP BARS OF ONE WAY SLABS, PARALLEL TO LONGER SPAN, AT 3'–0" (TYPICAL).

TYP. TWO WAY SLAB REINFORCEMENT CURTAILMENT DETAIL

SCALE: NTS

SCHEDULE OF LINTELS

S/No	CLEAR SPAN	CONFIGURATION
1	UPTO 4'-0"	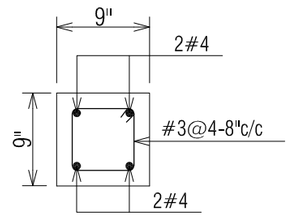
2	UPTO 6'-6"	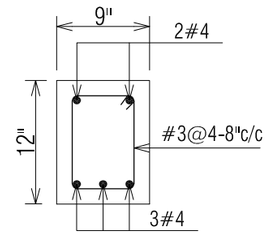
3	UPTO 8'-0"	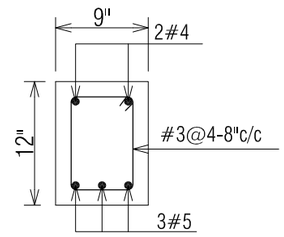
5	UPTO 12'-0"	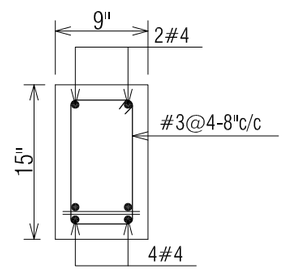

ADD./REV. NO.	DATE	DESCRIPTION	DES. BY	CHK. BY	APP. BY

ADDITION & REVISION

DESIGNER:

NEW VISION ENGINEERING CONSULTANT
Head Office: Office No.B-6 Second Floor Masood Arcade IJP Road Islamabad.
Ph: +92-51-4848374, Fax: +92-51-4848375
Email: newvisionec@yahoo.com
Regional Office: House # 98/4-2,Gardan Town,lahore
Ph: +92-42-35911695, Email: newvision761@yahoo.com

PROJECT: "PROVISION OF MISSING FACILITIES FOR THE SHAIKH AYAZ UNIVERSITY SHIKARPUR"

TITLE: **TYPICAL DETAIL**

CLIENT: **SHAIKH AYAZ UNIVERSITY SHIKARPUR**

DESIGNED BY: ENG. AHSAN	APPROVED BY:	DATE : MARCH, 2022
DRAWN BY: RIZWAN	JOB NO.	SCALE: N.T.S
DRG. NO. ST-04		

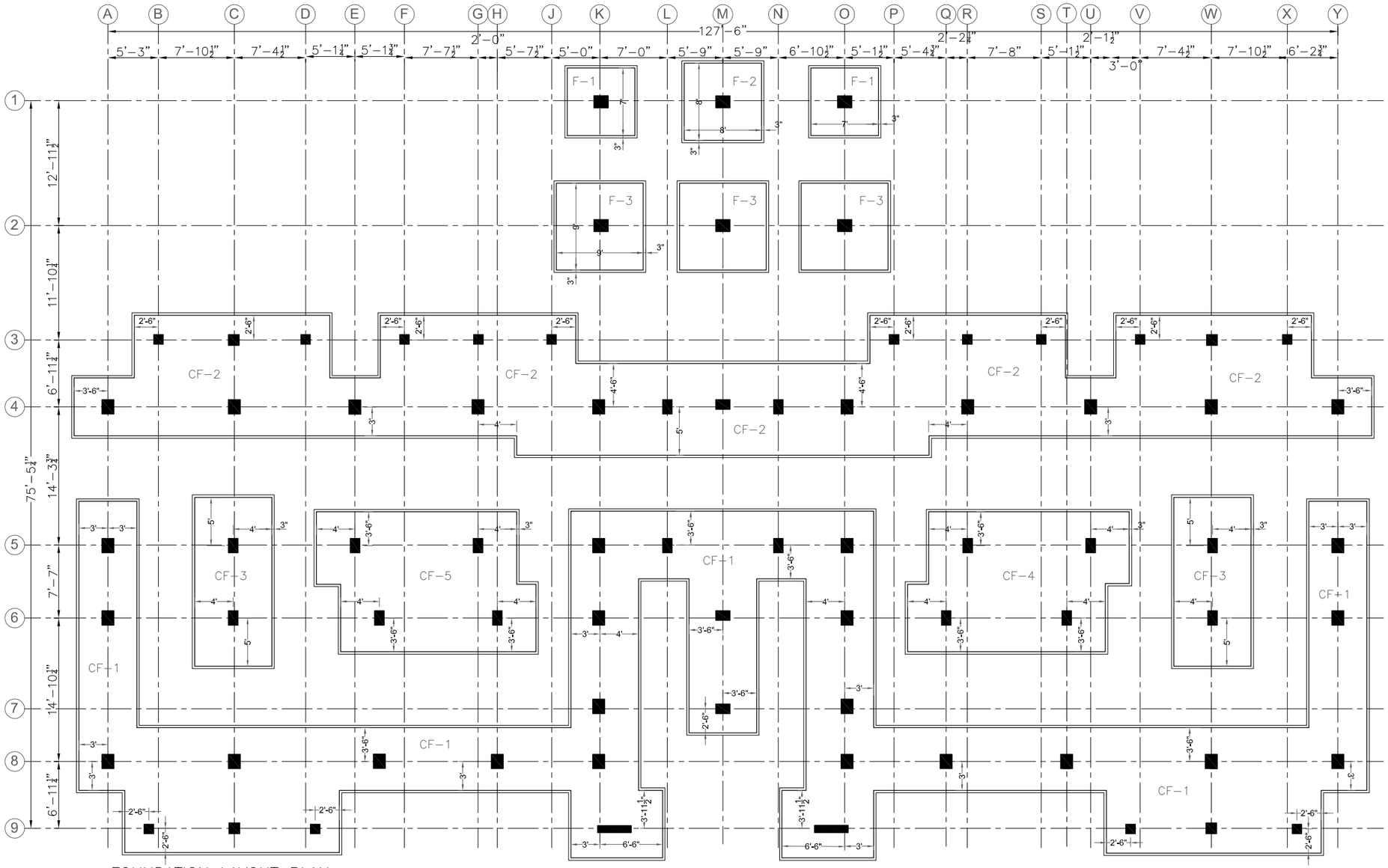

FOUNDATION LAYOUT PLAN

FOR MORE DETAIL REFER TO ARCHITECTURAL DRAWINGS

ADDITION & REVISION					
ADD./REV. NO.	DATE	DESCRIPTION	DES. BY	CHK. BY	APP. BY

DESIGNER:

NEW VISION ENGINEERING CONSULTANT

Head Office: Office No.B-6 Second Floor Masood Arcade IJP Road Islamabad.

Ph: +92-51-4848374, Fax: +92-51-4848375

Email: newvisionec@yahoo.com

Regional Office: House # 98/4-2,Gardan Town,lahore

Ph: +92-42-35911695, Email: newvision761@yahoo.com

PROJECT:

"PROVISION OF MISSING FACILITIES FOR THE SHAIKH AYAZ UNIVERSITY SHIKARPUR"

TITLE:

FOUNDATION LAYOUT PLAN

CLIENT:

SHAIKH AYAZ UNIVERSITY SHIKARPUR

DESIGNED BY: ENG. AHSAN	APPROVED BY:	DATE : MARCH, 2022
DRAWN BY: RIZWAN	JOB NO.	SCALE: N.T.S
DRG. NO. ST-05		

SCHEDULE OF FOOTINGS

BEARING CAPACITY Ton/Sq.ft.	MARK	SIZE						REINFORCEMENT DETAIL				REMARKS
		L	W	H	h	l	W	BOTTOM BARS		TOP BARS		
								BS	BL	TS	TL	
1.5	F1	7'-0"	7'-0"	15"	12"	12"	12"	#5@6" c/c	#5@6" c/c	–	–	ISOLATED FOOTING
1.5	F2	8'-0"	8'-0"	15"	12"	12"	12"	#5@5" c/c	#5@5" c/c	–	–	ISOLATED FOOTING
1.5	F3	9'-0"	9'-0"	15"	12"	12"	12"	#5@5" c/c	#5@5" c/c	–	–	ISOLATED FOOTING
1.5	CF1	SEE DRW-ST-05		15"	–			#5@6" c/c	#5@6" c/c	#4@8" c/c	#4@8" c/c	COMBINED FOOTING
1.5	CF2			15"	–			#5@6" c/c	#5@6" c/c	#4@8" c/c	#4@8" c/c	COMBINED FOOTING
1.5	CF3			15"	–			#5@6" c/c	#5@6" c/c	#4@8" c/c	#4@8" c/c	COMBINED FOOTING
1.5	CF4			15"	–			#5@6" c/c	#5@6" c/c	#4@8" c/c	#4@8" c/c	COMBINED FOOTING
1.5	CF5			15"	–			#5@6" c/c	#5@6" c/c	#4@8" c/c	#4@8" c/c	COMBINED FOOTING

ADDITION & REVISION

ADD./REV. NO.	DATE	DESCRIPTION	DES. BY	CHK. BY	APP. BY

DESIGNER:

NEW VISION ENGINEERING CONSULTANT
Head Office: Office No.B-6 Second Floor Masood Arcade IJP Road Islamabad.
Ph: +92-51-4848374, Fax: +92-51-4848375
Email: newvisionec@yahoo.com
Regional Office: House # 98/4-2,Gardan Town,lahore
Ph: +92-42-35911695, Email: newvision761@yahoo.com

PROJECT:
"PROVISION OF MISSING FACILITIES FOR THE SHAIKH AYAZ UNIVERSITY SHIKARPUR"

TITLE:
FOUNDATION REINFORCEMENT DETAIL

CLIENT:
SHAIKH AYAZ UNIVERSITY SHIKARPUR

DESIGNED BY:	APPROVED BY:	DATE :
ENG. AHSAN		MARCH, 2022
DRAWN BY: RIZWAN	JOB NO.	SCALE: N.T.S

DRG. NO. ST-06

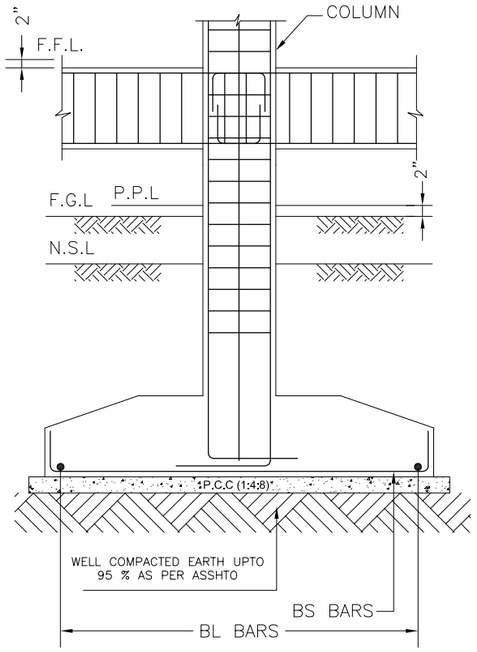

SECTION 1–1
REINFORCEMENT DETAILS

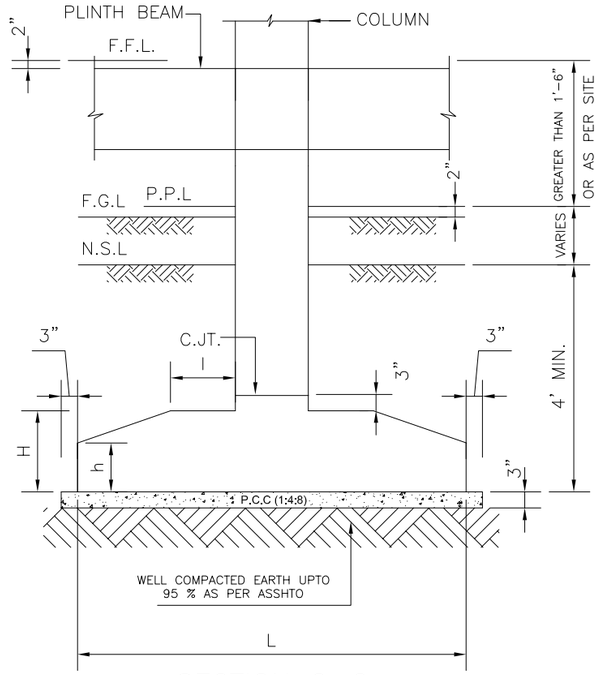

SECTION 2–2
CONCRETE OUTLINE

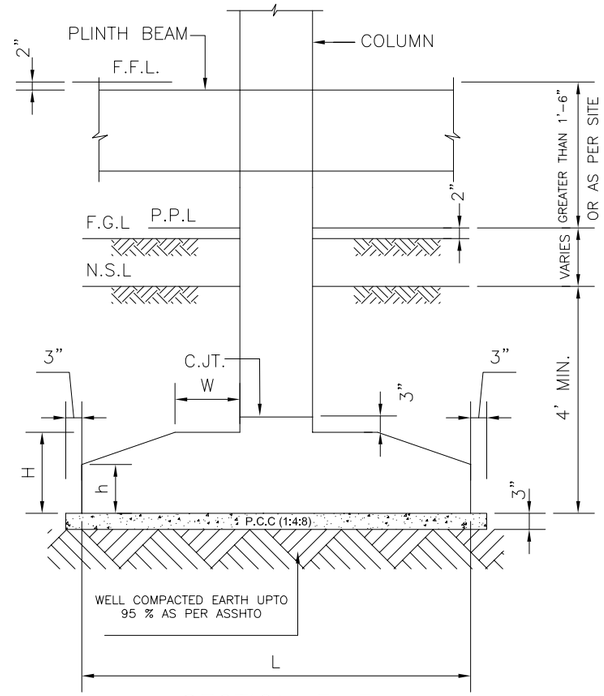

SECTION 3–3
CONCRETE OUTLINE

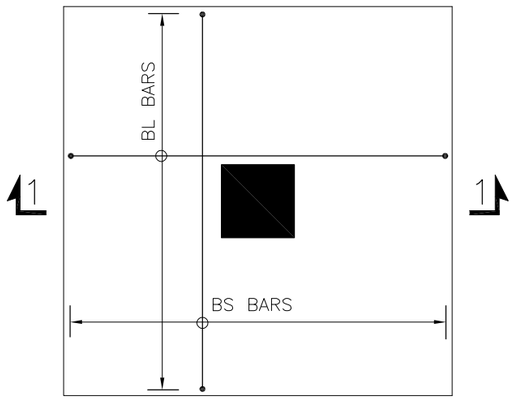

ISOLATED FOOTING (TYP.)
REINFORCEMENT DETAILS

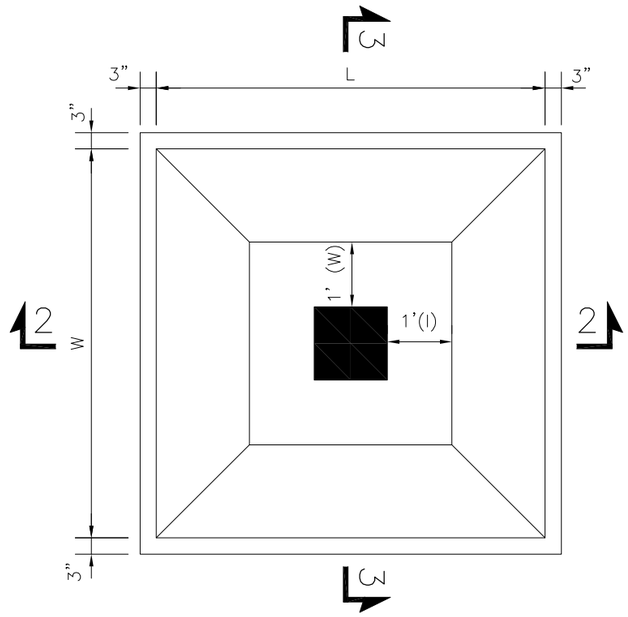

ISOLATED FOOTING (TYP.)
CONCRETE OUTLINE

ADDITION & REVISION					
ADD./REV. NO.	DATE	DESCRIPTION	DES. BY	CHK. BY	APP. BY

DESIGNER:

NEW VISION ENGINEERING CONSULTANT
Head Office: Office No.B-6 Second Floor Masood Arcade
IJP Road Islamabad.
Ph: +92-51-4848374, Fax: +92-51-4848375
Email: newvisionec@yahoo.com
Regional Office: House # 98/4-2,Gardan Town,lahore
Ph: +92-42-35911695, Email: newvision761@yahoo.com

PROJECT:
"PROVISION OF MISSING FACILITIES FOR THE SHAIKH AYAZ UNIVERSITY SHIKARPUR"

TITLE:
FOUNDATION SECTION DETAIL

CLIENT:
SHAIKH AYAZ UNIVERSITY SHIKARPUR

DESIGNED BY: ENG. AHSAN	APPROVED BY:	DATE : MARCH, 2022
DRAWN BY: RIZWAN	JOB NO.	SCALE: N.T.S
DRG. NO. ST-07		

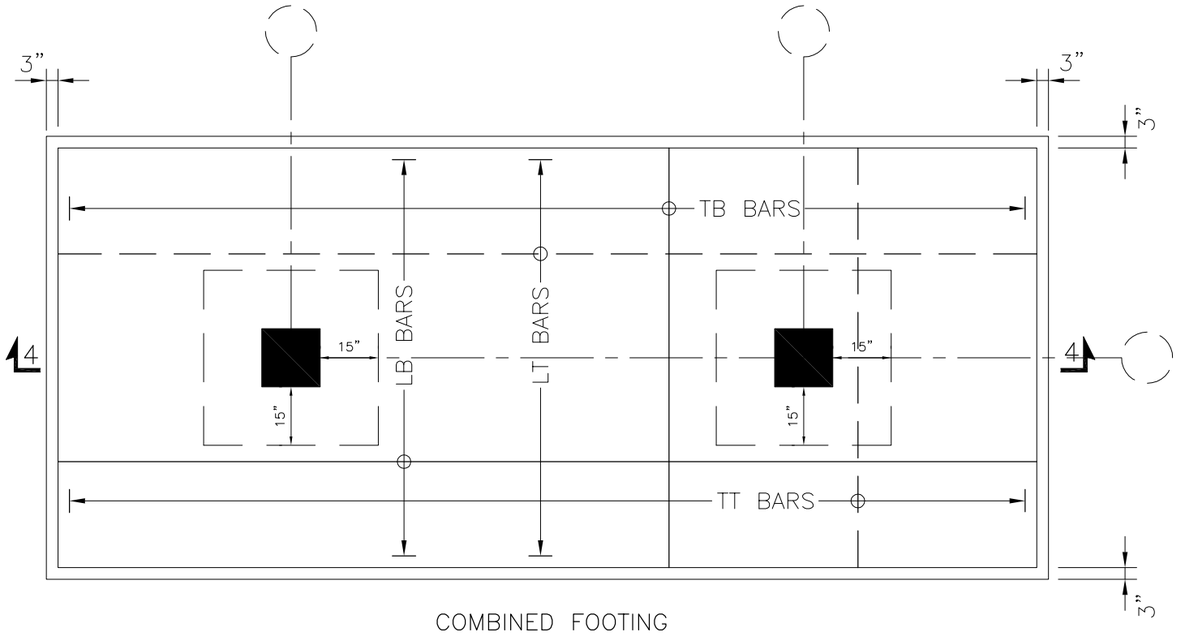

COMBINED FOOTING
REINFORCEMENT DETAIL

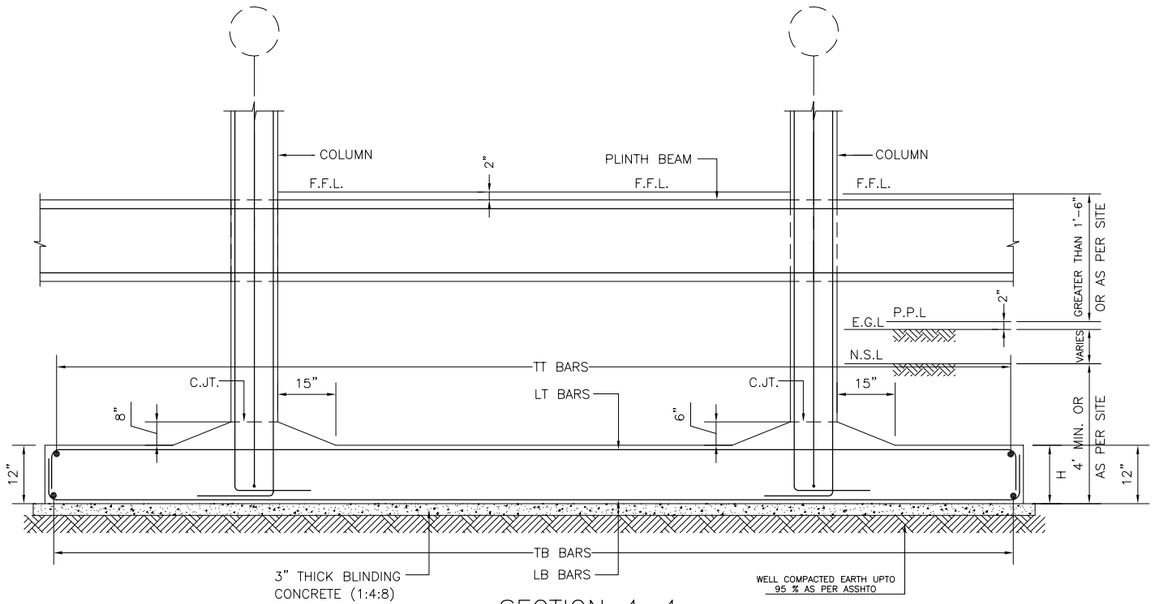

SECTION 4–4

ADDITION & REVISION					
ADD./REV. NO.	DATE	DESCRIPTION	DES. BY	CHK. BY	APP. BY

DESIGNER:

NEW VISION ENGINEERING CONSULTANT
Head Office: Office No.B-6 Second Floor Masood Arcade IJP Road Islamabad.
Ph: +92-51-4848374, Fax: +92-51-4848375
Email: newvisionec@yahoo.com
Regional Office: House # 98/4-2,Gardan Town,lahore
Ph: +92-42-35911695, Email: newvision761@yahoo.com

PROJECT:
"PROVISION OF MISSING FACILITIES FOR THE SHAIKH AYAZ UNIVERSITY SHIKARPUR"

TITLE:
FOUNDATION SECTION DETAIL

CLIENT:
SHAIKH AYAZ UNIVERSITY SHIKARPUR

DESIGNED BY: ENG. AHSAN	APPROVED BY:	DATE : MARCH, 2022
DRAWN BY: RIZWAN	JOB NO.	SCALE: N.T.S
DRG. NO. ST-07a		

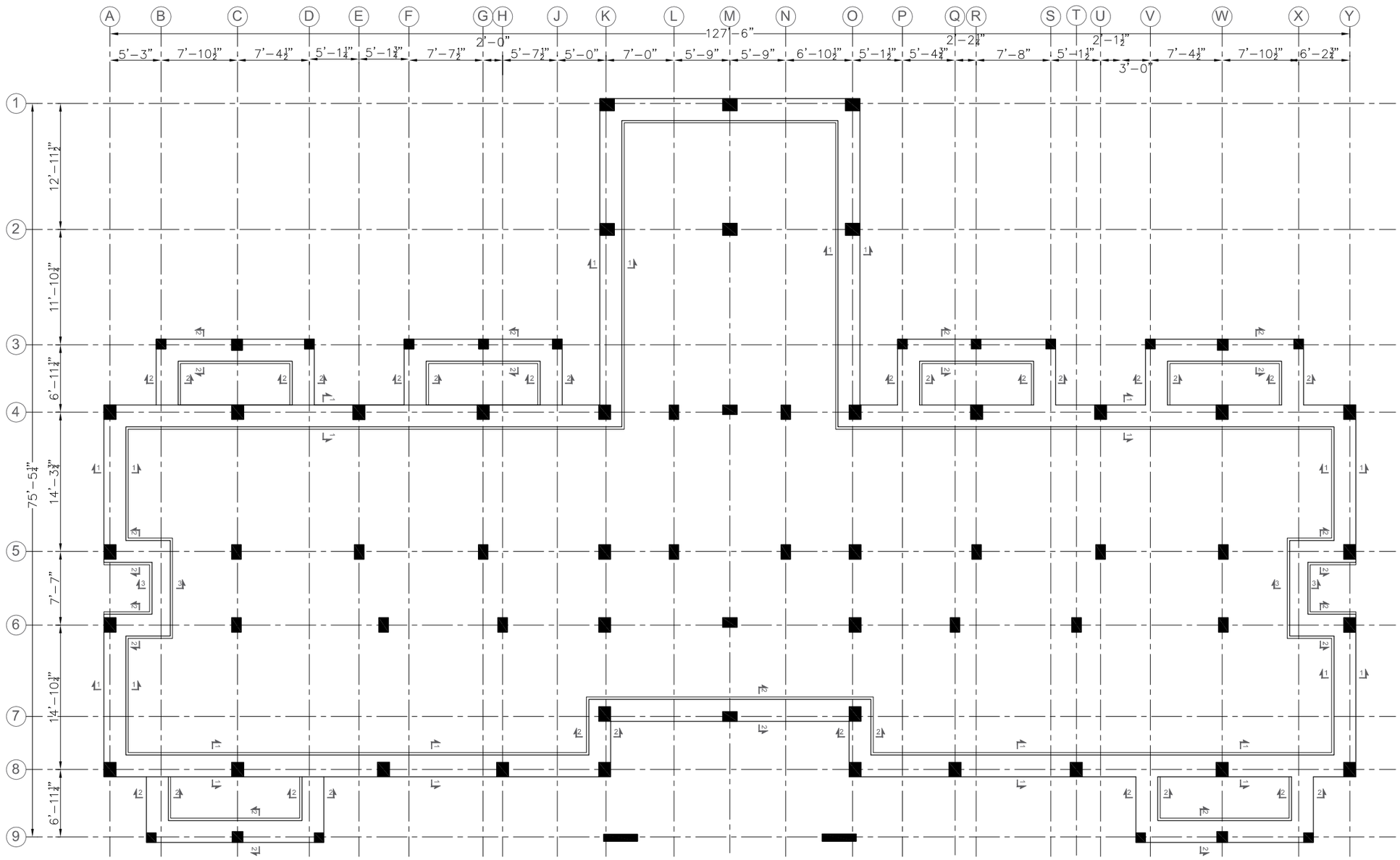

BRICK MASONRY FOUNDATION LAYOUT

FOR MORE DETAIL REFER TO ARCHITECTURAL DRAWINGS

ADDITION & REVISION					
ADD./REV. NO.	DATE	DESCRIPTION	DES. BY	CHK. BY	APP. BY

DESIGNER:

NEW VISION ENGINEERING CONSULTANT
Head Office: Office No.B-6 Second Floor Masood Arcade
IJP Road Islamabad.
Ph: +92-51-4848374, Fax: +92-51-4848375
Email: newvisionec@yahoo.com
Regional Office: House # 98/4-2,Gardan Town,lahore
Ph: +92-42-35911695, Email: newvision761@yahoo.com

PROJECT:
"PROVISION OF MISSING FACILITIES FOR THE SHAIKH AYAZ UNIVERSITY SHIKARPUR"

TITLE:
BRICK MASONRY FOUNDATION LAYOUT

CLIENT:
SHAIKH AYAZ UNIVERSITY SHIKARPUR

DESIGNED BY: ENG. AHSAN	APPROVED BY:	DATE : MARCH, 2022
DRAWN BY: RIZWAN	JOB NO.	SCALE: N.T.S
DRG. NO. ST-08		

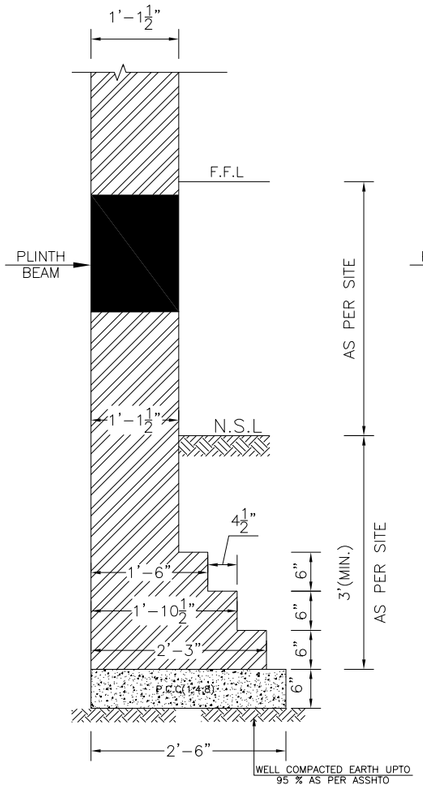

SECTION 1-1

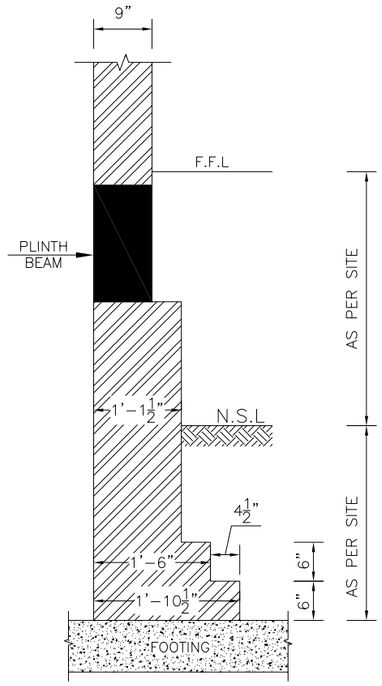

SECTION 2-2

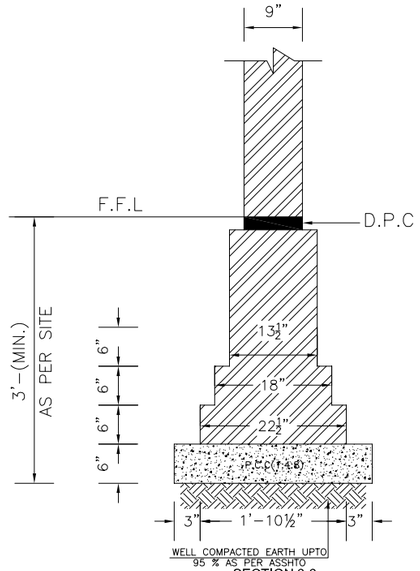

SECTION 3-3
BRICK FOOTING SECTION
9" TH WALL

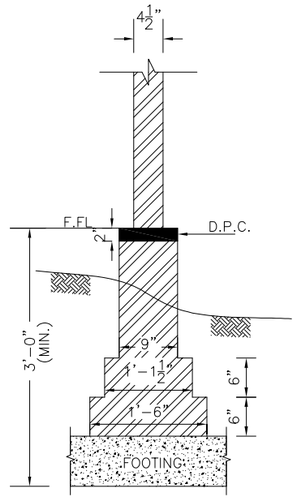

SECTION 4-4
BRICK FOOTING
4½" TH WALL

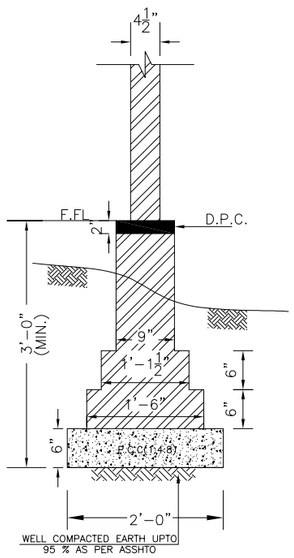

SECTION 5-5
BRICK FOOTING
4½" TH WALL

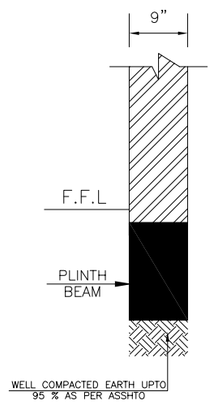

SECTION 6-6
INTERNAL 9" THICK
WALL ON PLINTH BEAM

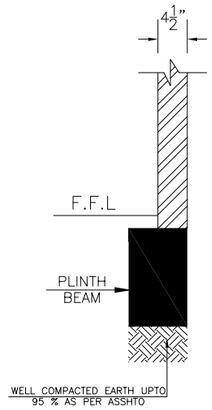

SECTION 7-7
INTERNAL 9" THICK
WALL ON PLINTH BEAM

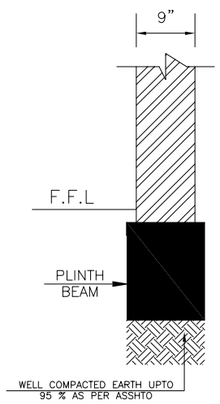

SECTION 8-8
INTERNAL 4½" THICK
WALL ON PLINTH BEAM

ADDITION & REVISION					
ADD./REV. NO.	DATE	DESCRIPTION	DES. BY	CHK. BY	APP. BY

DESIGNER:

NEW VISION ENGINEERING CONSULTANT
Head Office: Office No.B-6 Second Floor Masood Arcade
IJP Road Islamabad.
Ph: +92-51-4848374, Fax: +92-51-4848375
Email: newvisionec@yahoo.com
Regional Office: House # 98/4-2,Gardan Town,lahore
Ph: +92-42-35911695, Email: newvision761@yahoo.com

PROJECT:
"PROVISION OF MISSING FACILITIES FOR THE SHAIKH AYAZ UNIVERSITY SHIKARPUR"

TITLE:
BRICK MASONRY FOUNDATION SECTION DETAIL

CLIENT:
SHAIKH AYAZ UNIVERSITY SHIKARPUR

DESIGNED BY: ENG. AHSAN	APPROVED BY:	DATE : MARCH, 2022
DRAWN BY: RIZWAN	JOB NO.	SCALE: N.T.S
DRG. NO. ST-09		

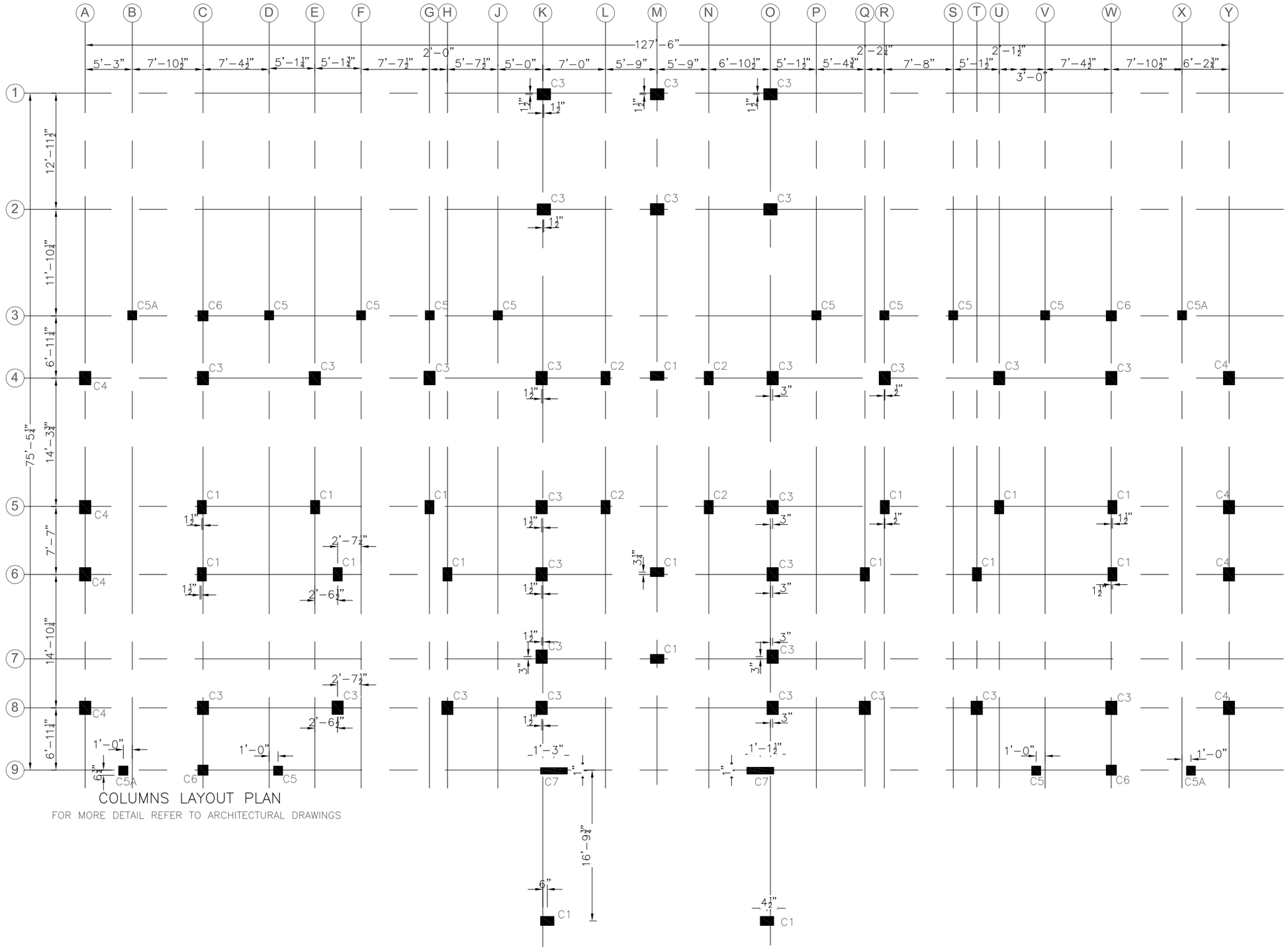

COLUMNS LAYOUT PLAN

FOR MORE DETAIL REFER TO ARCHITECTURAL DRAWINGS

ADD./REV. NO.	DATE	DESCRIPTION	DES. BY	CHK. BY	APP. BY

ADDITION & REVISION

DESIGNER:

NEW VISION ENGINEERING CONSULTANT
Head Office: Office No.B-6 Second Floor Masood Arcade
IJP Road Islamabad.
Ph: +92-51-4848375, Fax: +92-51-4848375
Email: newvisionec@yahoo.com

Regional Office: 287-A Street # 6, Cavalry Ground ,Lahore
Ph: +92-42-37250130

PROJECT:
"PROVISION OF MISSING FACILITIES FOR THE SHAIKH AYAZ UNIVERSITY SHIKARPUR"

TITLE OF DRAWING:
COLUMN LAYOUT PLAN

CLIENT:
SHAIKH AYAZ UNIVERSITY SHIKARPUR

DESIGNED BY: AK	APPROVED BY: MR	DATE.	MARCH, 2022
DRAWN BY: RIZ	JOB NO.	SCALE:	AS SHOWN
CHECKED BY: MF	DRG. NO. ST-10		

	C1	C2	C3	C4	C5 & C5A	C6	C7
ROOF TO MUMTY	—	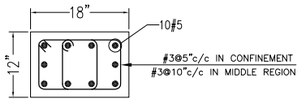 TYPICAL SEC. OF COLUMN (C2)	—	—	—	—	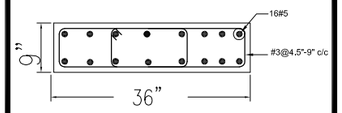 TYPICAL SEC. OF COLUMN (C7)
GF TO 1st	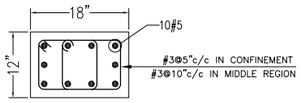 TYPICAL SEC. OF COLUMN (C1)	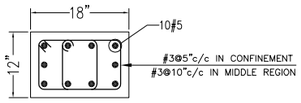 TYPICAL SEC. OF COLUMN (C2)	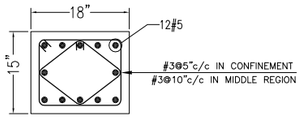 TYPICAL SEC. OF COLUMN (C3)	—	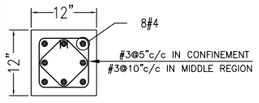 TYPICAL SEC. OF COLUMN (C5)	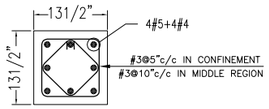 TYPICAL SEC. OF COLUMN (C6)	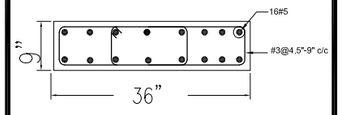 TYPICAL SEC. OF COLUMN (C7)
PLTO GF	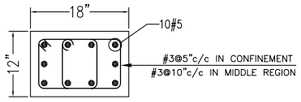 TYPICAL SEC. OF COLUMN (C1)	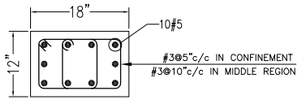 TYPICAL SEC. OF COLUMN (C2)	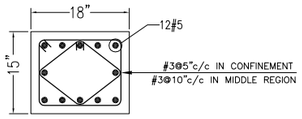 TYPICAL SEC. OF COLUMN (C3)	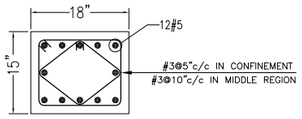 TYPICAL SEC. OF COLUMN (C4)	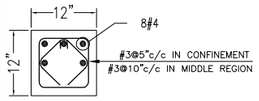 TYPICAL SEC. OF COLUMN (C5A)	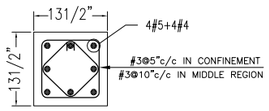 TYPICAL SEC. OF COLUMN (C6)	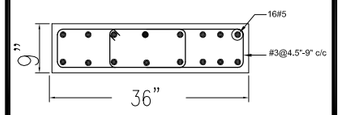 TYPICAL SEC. OF COLUMN (C7)
BASE TO PL	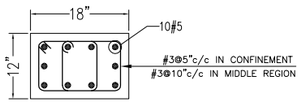 TYPICAL SEC. OF COLUMN (C1)	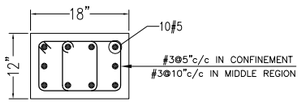 TYPICAL SEC. OF COLUMN (C2)	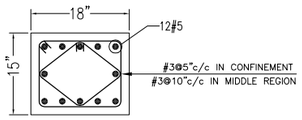 TYPICAL SEC. OF COLUMN (C3)	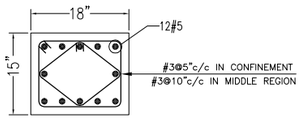 TYPICAL SEC. OF COLUMN (C4)	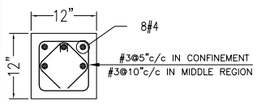 TYPICAL SEC. OF COLUMN (C5A)	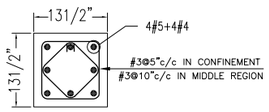 TYPICAL SEC. OF COLUMN (C6)	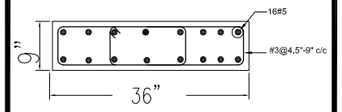 TYPICAL SEC. OF COLUMN (C7)

COLUMN SECTION (UP TO EACH STOREY LEVEL)

NOTE:- FOR FLOOR LEVELS REFER ARCHITECTURE DRAWINGS

ADDITION & REVISION

ADD./REV. NO.	DATE	DESCRIPTION	DES. BY	CHK. BY	APP. BY

DESIGNER:

NEW VISION ENGINEERING CONSULTANT
Head Office: Office No.B-6 Second Floor Masood Arcade
IJP Road Islamabad.
Ph: +92-51-4848375, Fax: +92-51-4848375
Email: newvisionec@yahoo.com

Regional Office: 287-A Street # 6, Cavalry Ground ,Lahore
Ph: +92-42-37250130

PROJECT:
"PROVISION OF MISSING FACILITIES FOR THE SHAIKH AYAZ UNIVERSITY SHIKARPUR"

TITLE OF DRAWING:
COLUMN SECTION DETAIL

CLIENT:
SHAIKH AYAZ UNIVERSITY SHIKARPUR

DESIGNED BY: AK	APPROVED BY: MR	DATE. MARCH, 2022
DRAWN BY: RIZ	JOB NO.	SCALE: AS SHOWN
CHECKED BY: MF	DRG. NO. ST-11	

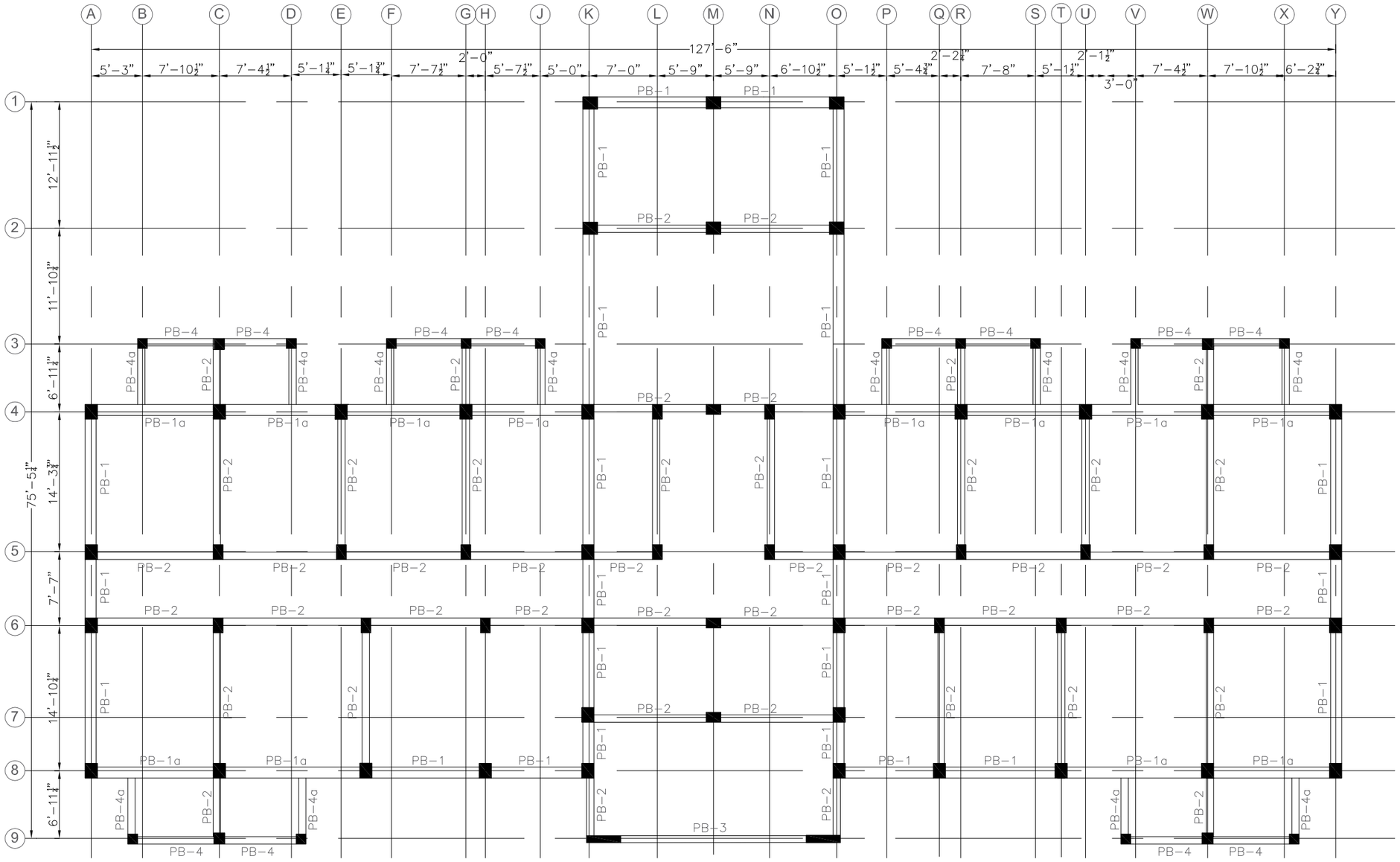

PLINTH BEAMS LAYOUT PLAN

FOR MORE DETAIL REFER TO ARCHITECTURAL DRAWINGS

ADDITION & REVISION					
ADD./REV. NO	DATE	DESCRIPTION	DES. BY	CHK. BY	APP. BY

DESIGNER:

NEW VISION ENGINEERING CONSULTANT

Head Office: Office No.B-6 Second Floor Masood Arcade
IJP Road Islamabad.
Ph: +92-51-4848375, Fax: +92-51-4848375
Email: newvisionec@yahoo.com

Regional Office: 287-A Street # 6, Cavalry Ground ,Lahore
Ph: +92-42-37250130

PROJECT:

"PROVISION OF MISSING FACILITIES FOR THE SHAIKH AYAZ UNIVERSITY SHIKARPUR"

TITLE OF DRAWING:

PLINTH BEAMS LAYOUT PLAN

CLIENT:

SHAIKH AYAZ UNIVERSITY SHIKARPUR

DESIGNED BY:	AK	APPROVED BY:	MR	DATE.	MARCH, 2022
DRAWN BY:	RIZ	JOB NO.		SCALE:	AS SHOWN
CHECKED BY:	MF	DRG. NO.	ST-12		

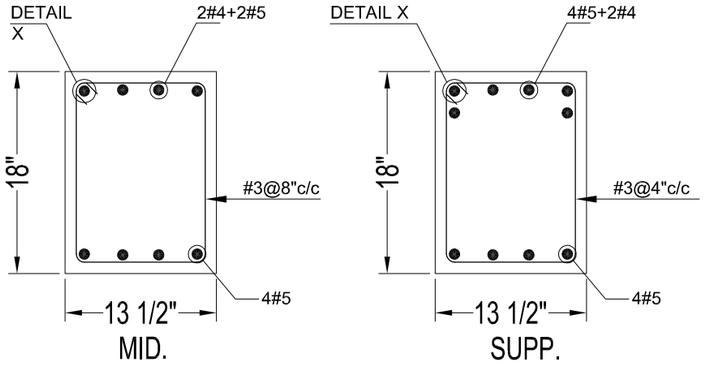

TYPICAL SEC. OF PB-1

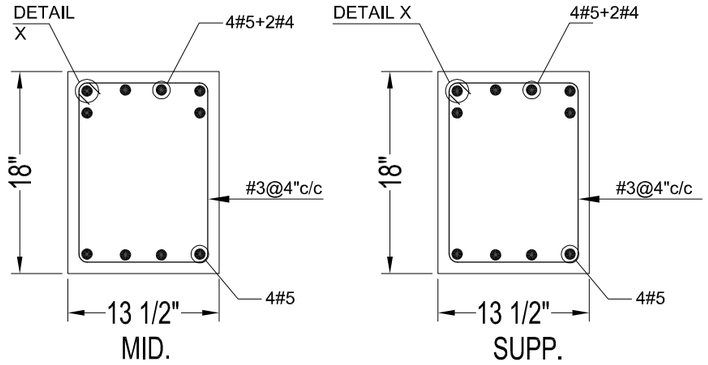

TYPICAL SEC. OF PB-1a

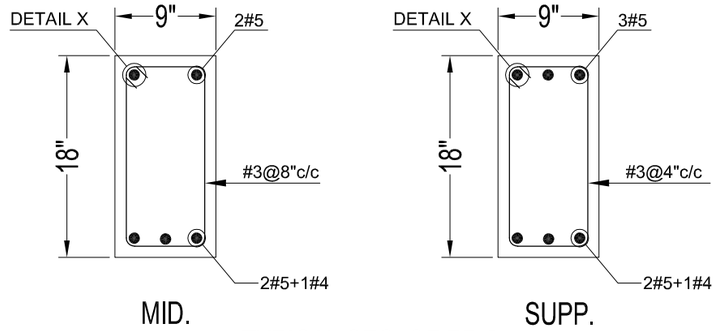

TYPICAL SEC. OF PB-2

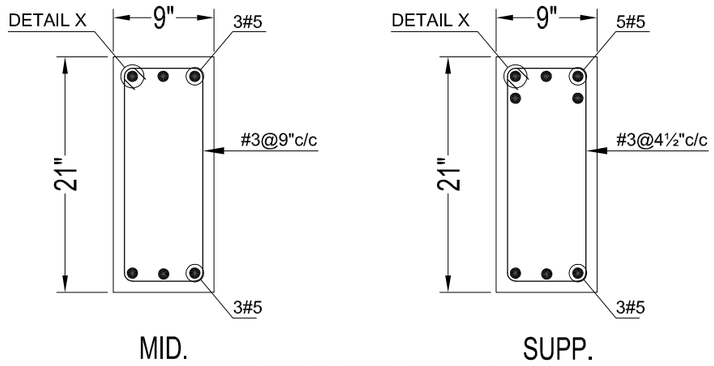

TYPICAL SEC. OF PB-3

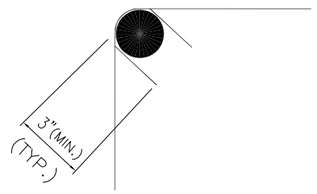

DETAIL 'X'

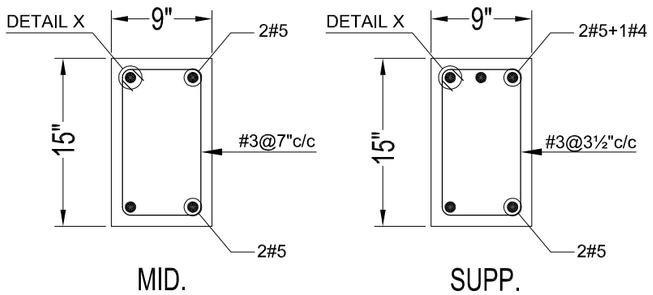

TYPICAL SEC. OF PB-4

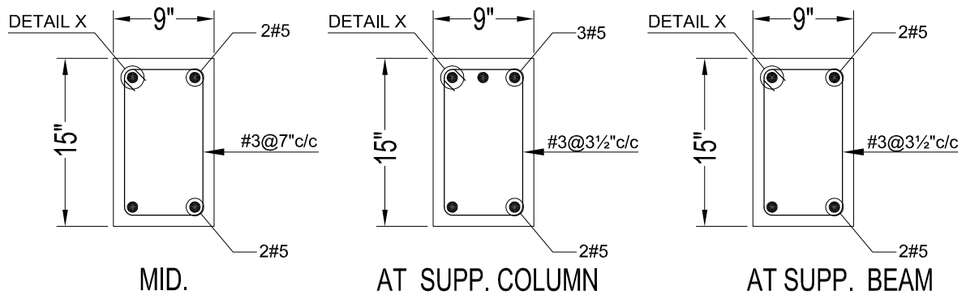

TYPICAL SEC. OF PB-4

ADDITION & REVISION					
ADD./REV. NO.	DATE	DESCRIPTION	DES. BY	CHK. BY	APP. BY

DESIGNER:

NEW VISION ENGINEERING CONSULTANT
Head Office: Office No.B-6 Second Floor Masood Arcade
IJP Road Islamabad.
Ph: +92-51-4848375, Fax: +92-51-4848375
Email: newvisionec@yahoo.com

Regional Office: 287-A Street # 6, Cavalry Ground ,Lahore
Ph: +92-42-37250130

PROJECT:
"PROVISION OF MISSING FACILITIES FOR THE SHAIKH AYAZ UNIVERSITY SHIKARPUR"

TITLE OF DRAWING:
PLINTH BEAMS SECTION DETAIL

CLIENT:
SHAIKH AYAZ UNIVERSITY SHIKARPUR

DESIGNED BY: AK	APPROVED BY: MR	DATE.	MARCH, 2022
DRAWN BY: RIZ	JOB NO.	SCALE:	AS SHOWN
CHECKED BY: MF	DRG. NO. ST-13		

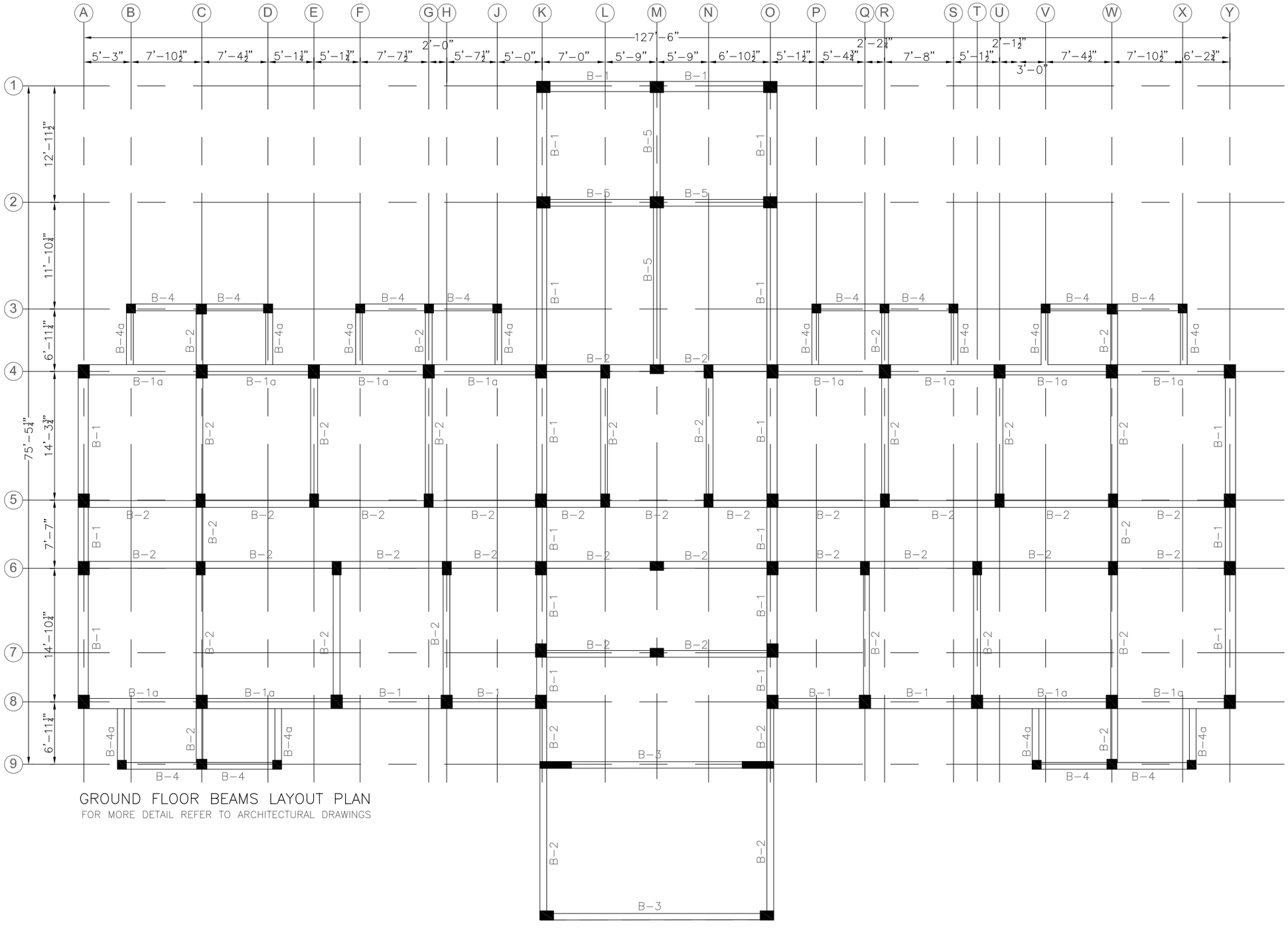

GROUND FLOOR BEAMS LAYOUT PLAN

FOR MORE DETAIL REFER TO ARCHITECTURAL DRAWINGS

ADDITION & REVISION					
ADD./REV. NO.	DATE	DESCRIPTION	DES. BY	CHK. BY	APP. BY

DESIGNER:

NEW VISION ENGINEERING CONSULTANT
Head Office: Office No.B-6 Second Floor Masood Arcade
IJP Road Islamabad.
Ph: +92-51-4848375, Fax: +92-51-4848375
Email: newvisionec@yahoo.com

Regional Office: 287-A Street # 6, Cavalry Ground ,Lahore
Ph: +92-42-37250130

PROJECT:
"PROVISION OF MISSING FACILITIES FOR THE SHAIKH AYAZ UNIVERSITY SHIKARPUR"

TITLE OF DRAWING:
GROUND FLOOR BEAM LAYOUT PLAN

CLIENT:
SHAIKH AYAZ UNIVERSITY SHIKARPUR

DESIGNED BY:	AK	APPROVED BY:	MR	DATE.	MARCH, 2022
DRAWN BY:	RIZ	JOB NO.		SCALE:	AS SHOWN
CHECKED BY:	MF	DRG. NO.	ST-14		

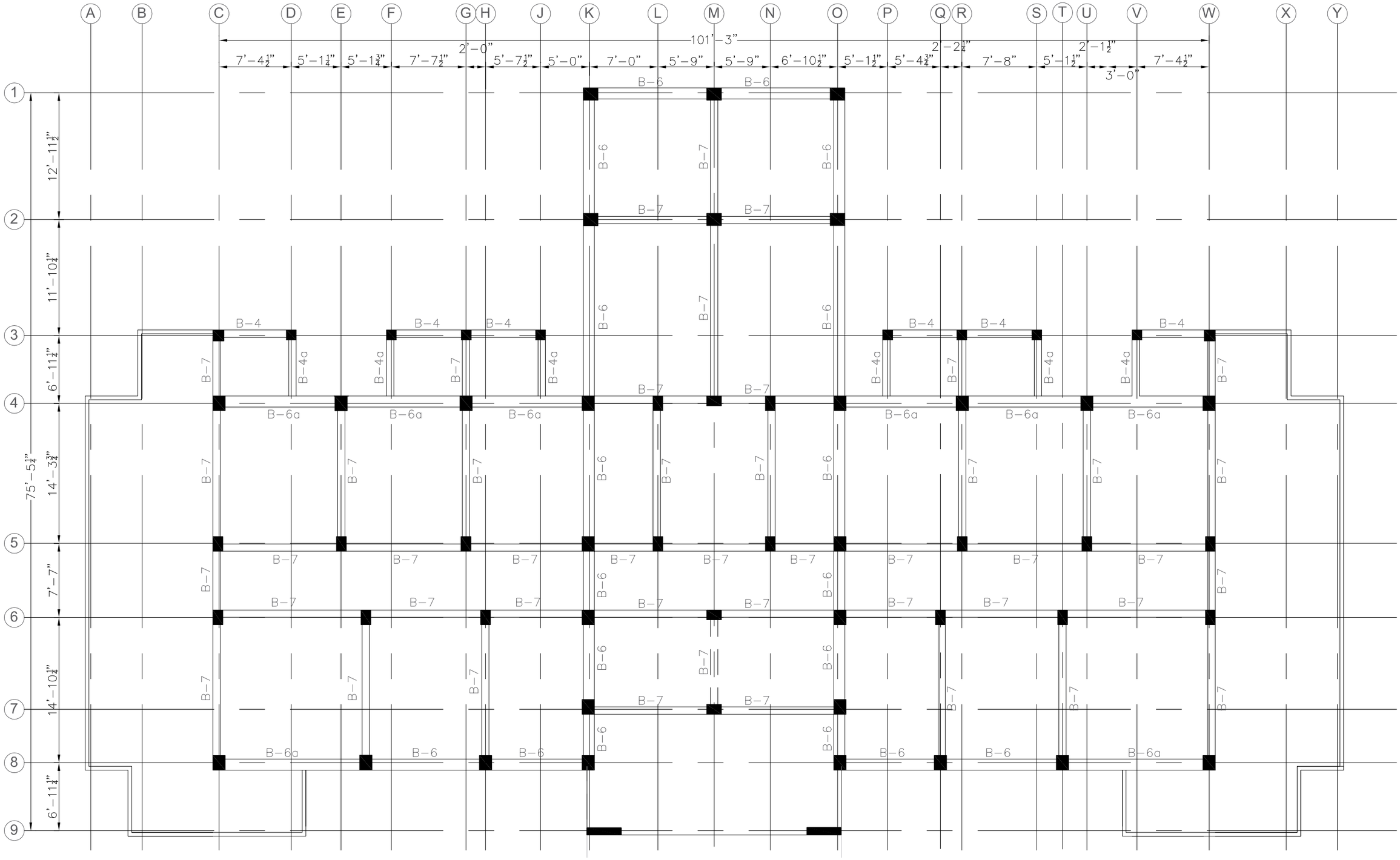

FIRST FLOOR BEAMS LAYOUT PLAN

FOR MORE DETAIL REFER TO ARCHITECTURAL DRAWINGS

ADDITION & REVISION					
ADD./REV. NO.	DATE	DESCRIPTION	DES. BY	CHK. BY	APP. BY

DESIGNER:

NEW VISION ENGINEERING CONSULTANT
Head Office: Office No.B-6 Second Floor Masood Arcade
IJP Road Islamabad.
Ph: +92-51-4848375, Fax: +92-51-4848375
Email: newvisionec@yahoo.com

Regional Office: 287-A Street # 6, Cavalry Ground ,Lahore
Ph: +92-42-37250130

PROJECT:
"PROVISION OF MISSING FACILITIES FOR THE SHAIKH AYAZ UNIVERSITY SHIKARPUR"

TITLE OF DRAWING:
FIRST FLOOR BEAM LAYOUT PLAN

CLIENT:
SHAIKH AYAZ UNIVERSITY SHIKARPUR

DESIGNED BY: AK	APPROVED BY: MR		DATE.	MARCH, 2022	
DRAWN BY: RIZ	JOB NO.		SCALE:	AS SHOWN	
CHECKED BY: MF	DRG. NO.	ST-15			

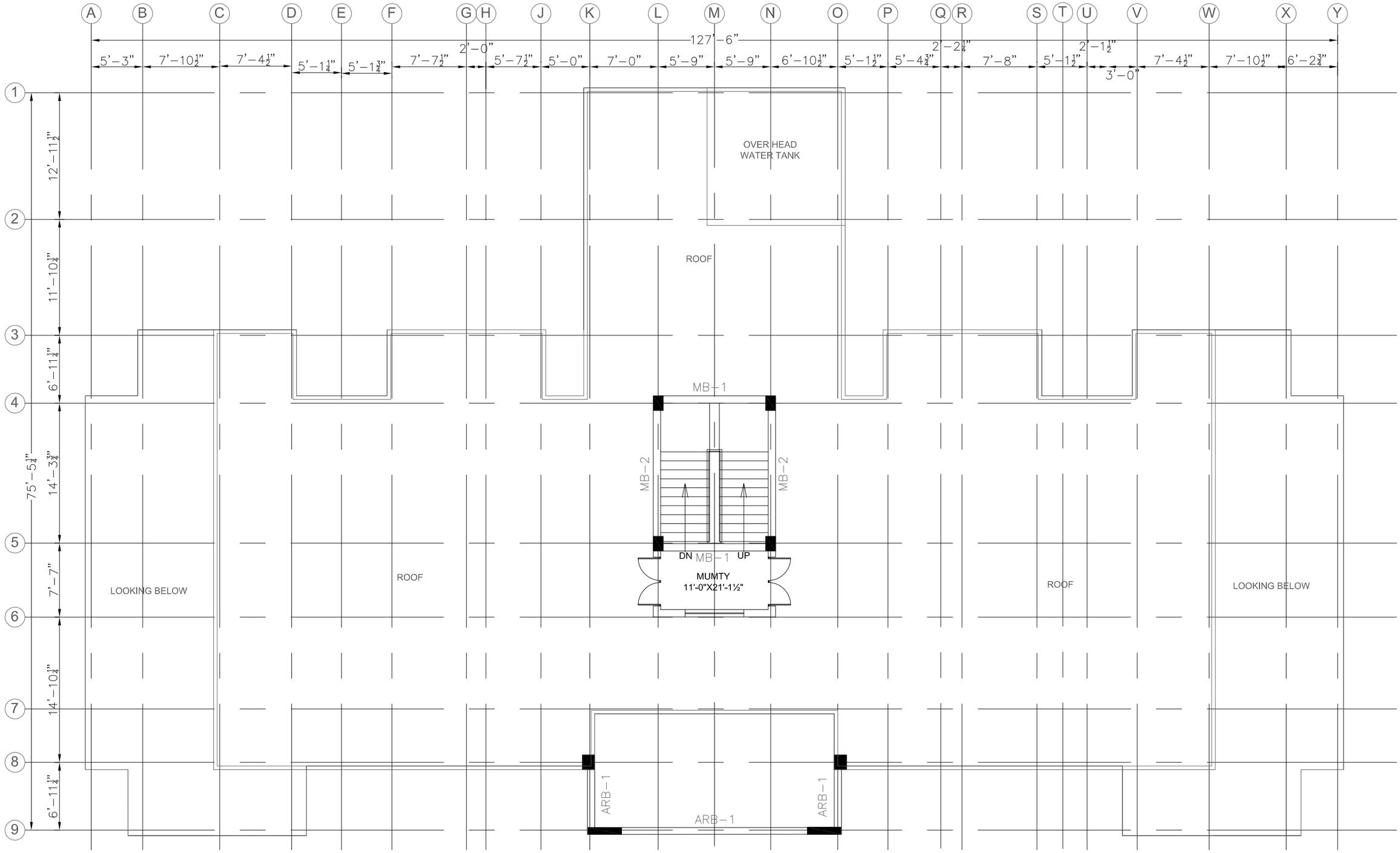

MUMTY BEAMS LAYOUT PLAN

FOR MORE DETAIL REFER TO ARCHITECTURAL DRAWINGS

ADDITION & REVISION					
ADD./REV. NO.	DATE	DESCRIPTION	DES. BY	CHK. BY	APP. BY

DESIGNER:

NEW VISION ENGINEERING CONSULTANT
Head Office: Office No.B-6 Second Floor Masood Arcade
IJP Road Islamabad.
Ph: +92-51-4848375, Fax: +92-51-4848375
Email: newvisionec@yahoo.com

Regional Office: 287-A Street # 6, Cavalry Ground ,Lahore
Ph: +92-42-37250130

PROJECT:
"PROVISION OF MISSING FACILITIES FOR THE SHAIKH AYAZ UNIVERSITY SHIKARPUR"

TITLE OF DRAWING:
MUMTY BEAM LAYOUT PLAN

CLIENT:
SHAIKH AYAZ UNIVERSITY SHIKARPUR

DESIGNED BY:	AK	APPROVED BY:	MR	DATE.	MARCH, 2022
DRAWN BY:	RIZ	JOB NO.		SCALE:	AS SHOWN
CHECKED BY:	MF	DRG. NO.	ST-16		

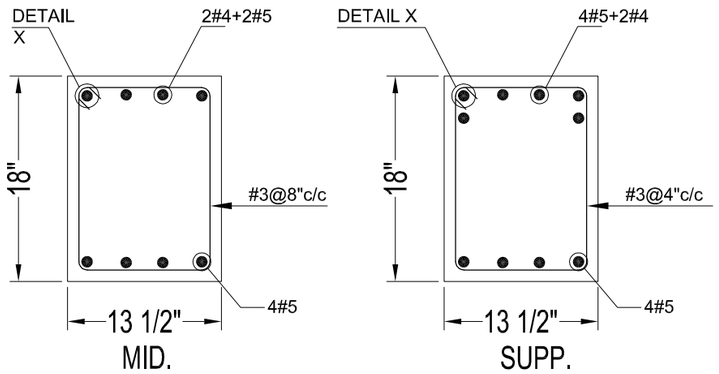

TYPICAL SEC. OF B-1

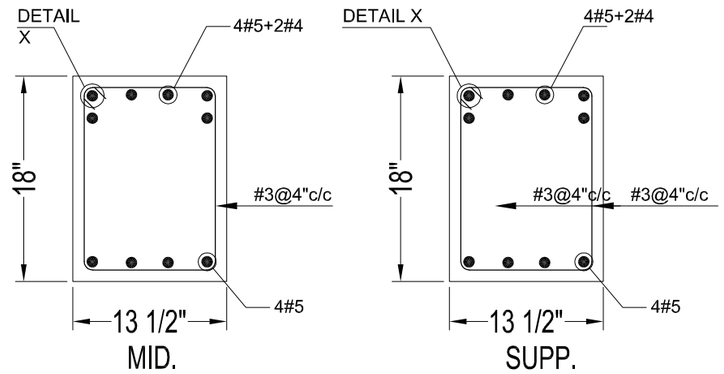

TYPICAL SEC. OF B-1a

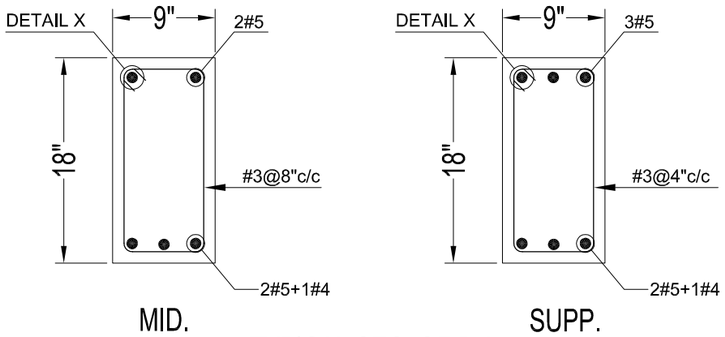

TYPICAL SEC. OF B-2

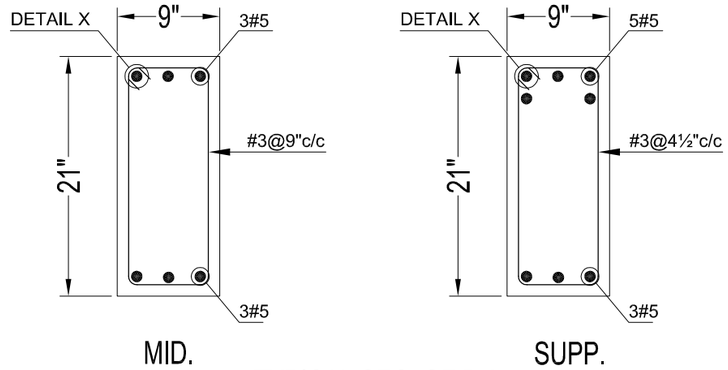

TYPICAL SEC. OF B-3

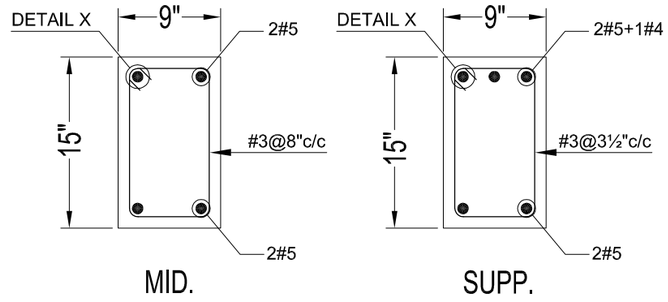

TYPICAL SEC. OF B-4

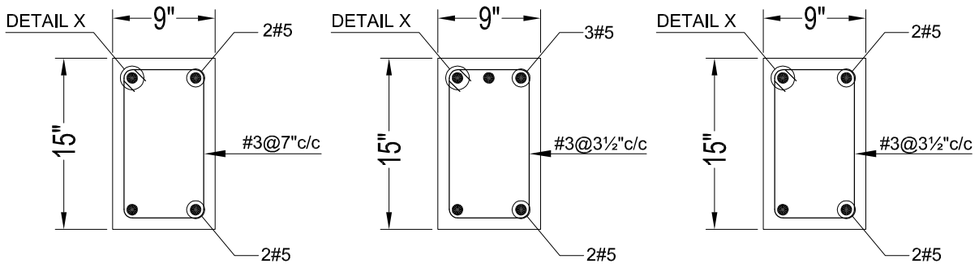

TYPICAL SEC. OF B-4a

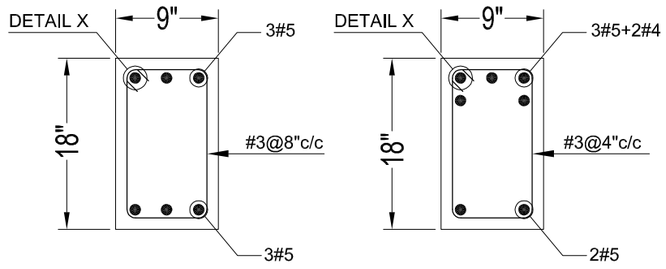

TYPICAL SEC. OF B-5

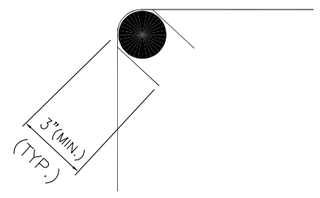

DETAIL 'X'

ADD./REV. NO.	DATE	DESCRIPTION	DES. BY	CHK. BY	APP. BY

ADDITION & REVISION

DESIGNER:

NEW VISION ENGINEERING CONSULTANT
Head Office: Office No.B-6 Second Floor Masood Arcade
IJP Road Islamabad.
Ph: +92-51-4848375, Fax: +92-51-4848375
Email: newvisionec@yahoo.com

Regional Office: 287-A Street # 6, Cavalry Ground ,Lahore
Ph: +92-42-37250130

PROJECT:
"PROVISION OF MISSING FACILITIES FOR THE SHAIKH AYAZ UNIVERSITY SHIKARPUR"

TITLE OF DRAWING:
GROUND FLOOR BEAM SECTION DETAIL

CLIENT:
SHAIKH AYAZ UNIVERSITY SHIKARPUR

DESIGNED BY: AK	APPROVED BY: MR		DATE.	MARCH, 2022	
DRAWN BY: RIZ	JOB NO.		SCALE:	AS SHOWN	
CHECKED BY: MF	DRG. NO.	ST-17			

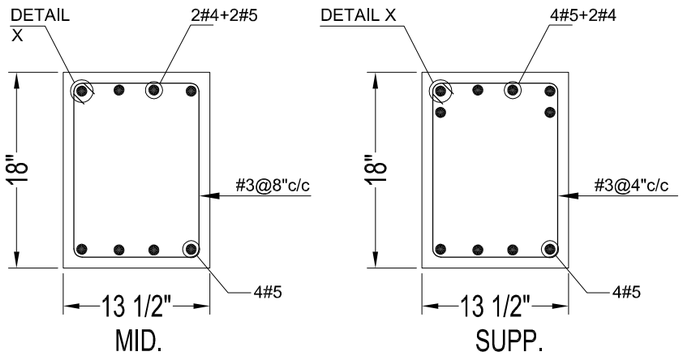

TYPICAL SEC. OF B-6

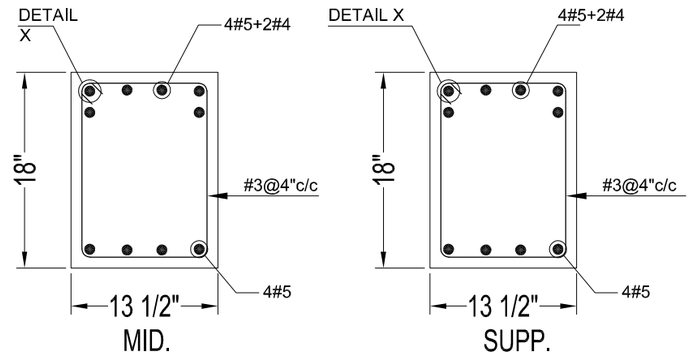

TYPICAL SEC. OF B-1a

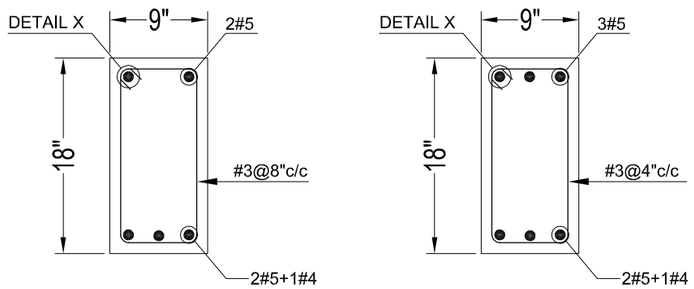

TYPICAL SEC. OF B-7

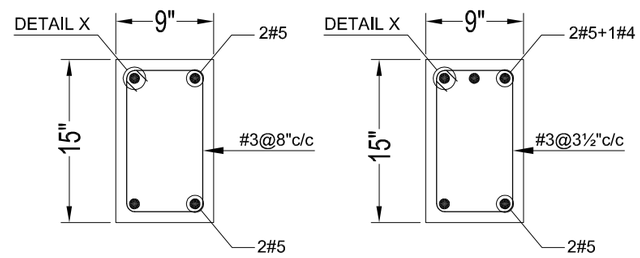

TYPICAL SEC. OF B-8

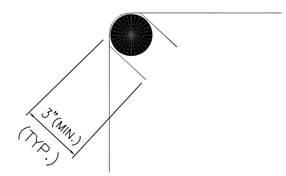

DETAIL 'X'

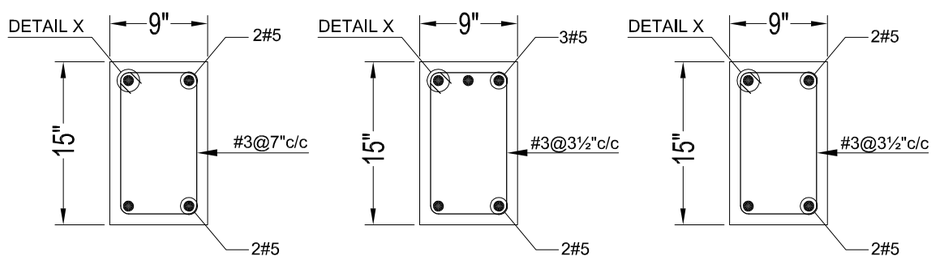

TYPICAL SEC. OF B-8a

ADDITION & REVISION					
ADD./REV. NO.	DATE	DESCRIPTION	DES. BY	CHK. BY	APP. BY

DESIGNER:

NEW VISION ENGINEERING CONSULTANT
Head Office: Office No.B-6 Second Floor Masood Arcade
IJP Road Islamabad.
Ph: +92-51-4848375, Fax: +92-51-4848375
Email: newvisionec@yahoo.com

Regional Office: 287-A Street # 6, Cavalry Ground ,Lahore
Ph: +92-42-37250130

PROJECT:
"PROVISION OF MISSING FACILITIES FOR THE SHAIKH AYAZ UNIVERSITY SHIKARPUR"

TITLE OF DRAWING:
FIRST FLOOR BEAM SECTION DETAIL

CLIENT:
SHAIKH AYAZ UNIVERSITY SHIKARPUR

DESIGNED BY: AK	APPROVED BY: MR	DATE. MARCH, 2022
DRAWN BY: RIZ	JOB NO.	SCALE: AS SHOWN
CHECKED BY: MF	DRG. NO. ST-18	

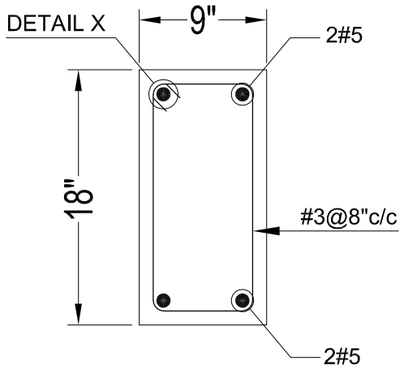

MID.

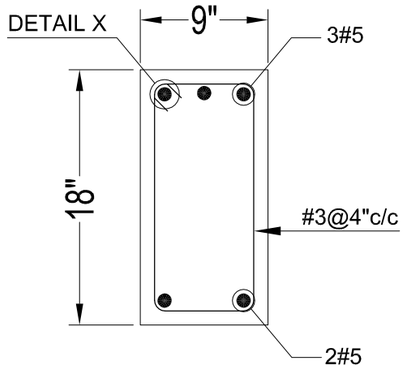

SUPP.

TYPICAL SEC. OF MB-1

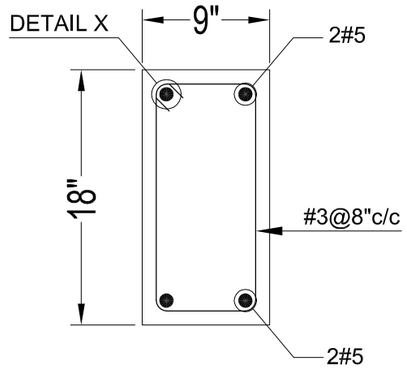

MID.

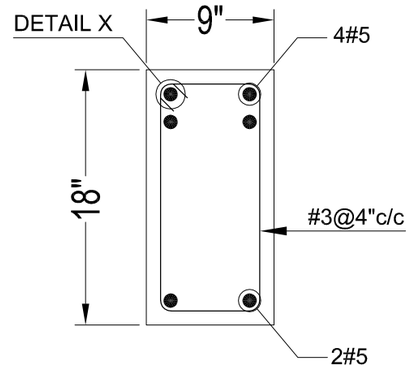

SUPP.

TYPICAL SEC. OF MB-2

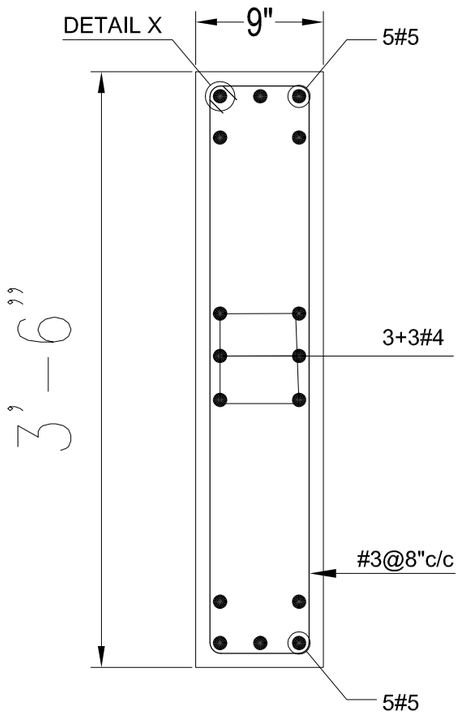

TYPICAL SEC. OF ARB-1

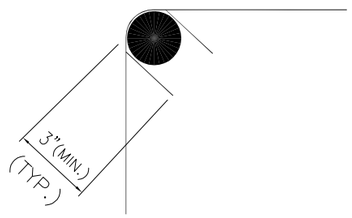

DETAIL 'X'

ADDITION & REVISION					
ADD./REV. NO.	DATE	DESCRIPTION	DES. BY	CHK. BY	APP. BY

DESIGNER:

NEW VISION ENGINEERING CONSULTANT
Head Office: Office No.B-6 Second Floor Masood Arcade
IJP Road Islamabad.
Ph: +92-51-4848375, Fax: +92-51-4848375
Email: newvisionec@yahoo.com

Regional Office: 287-A Street # 6, Cavalry Ground ,Lahore
Ph: +92-42-37250130

PROJECT:
"PROVISION OF MISSING FACILITIES FOR THE SHAIKH AYAZ UNIVERSITY SHIKARPUR"

TITLE OF DRAWING:
MUMTY BEAM SECTION DETAIL

CLIENT:
SHAIKH AYAZ UNIVERSITY SHIKARPUR

DESIGNED BY: AK	APPROVED BY: MR	DATE. MARCH, 2022
DRAWN BY: RIZ	JOB NO.	SCALE: AS SHOWN
CHECKED BY: MF	DRG. NO. ST-19	

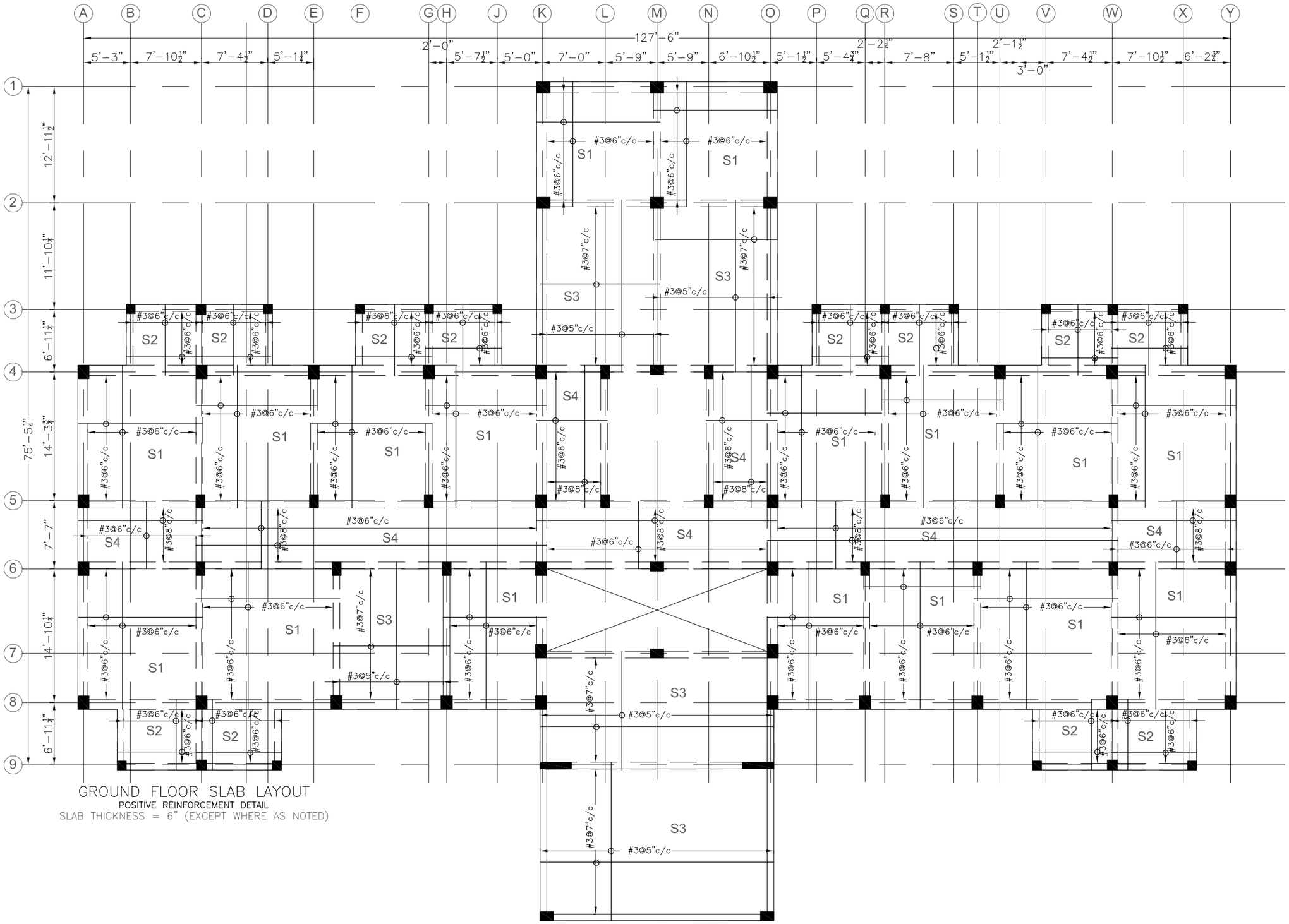

GROUND FLOOR SLAB LAYOUT
POSITIVE REINFORCEMENT DETAIL
SLAB THICKNESS = 6" (EXCEPT WHERE AS NOTED)

ADDITION & REVISION					
ADD./REV. NO.	DATE	DESCRIPTION	DES. BY	CHK. BY	APP. BY

DESIGNER:

NEW VISION ENGINEERING CONSULTANT
Head Office: Office No.B-6 Second Floor Masood Arcade
IJP Road Islamabad.
Ph: +92-51-4848375, Fax: +92-51-4848375
Email: newvisionec@yahoo.com

Regional Office: 287-A Street # 6, Cavalry Ground ,Lahore
Ph: +92-42-37250130

PROJECT:
"PROVISION OF MISSING FACILITIES FOR THE SHAIKH AYAZ UNIVERSITY SHIKARPUR"

TITLE OF DRAWING:
GROUND FLOOR SLAB LAYOUT
POSITIVE REINFORCEMENT DETAIL

CLIENT:
SHAIKH AYAZ UNIVERSITY SHIKARPUR

DESIGNED BY:	AK	APPROVED BY:	MR	DATE.	MARCH, 2022
DRAWN BY:	RIZ	JOB NO.		SCALE:	AS SHOWN
CHECKED BY:	MF	DRG. NO.	ST-20		

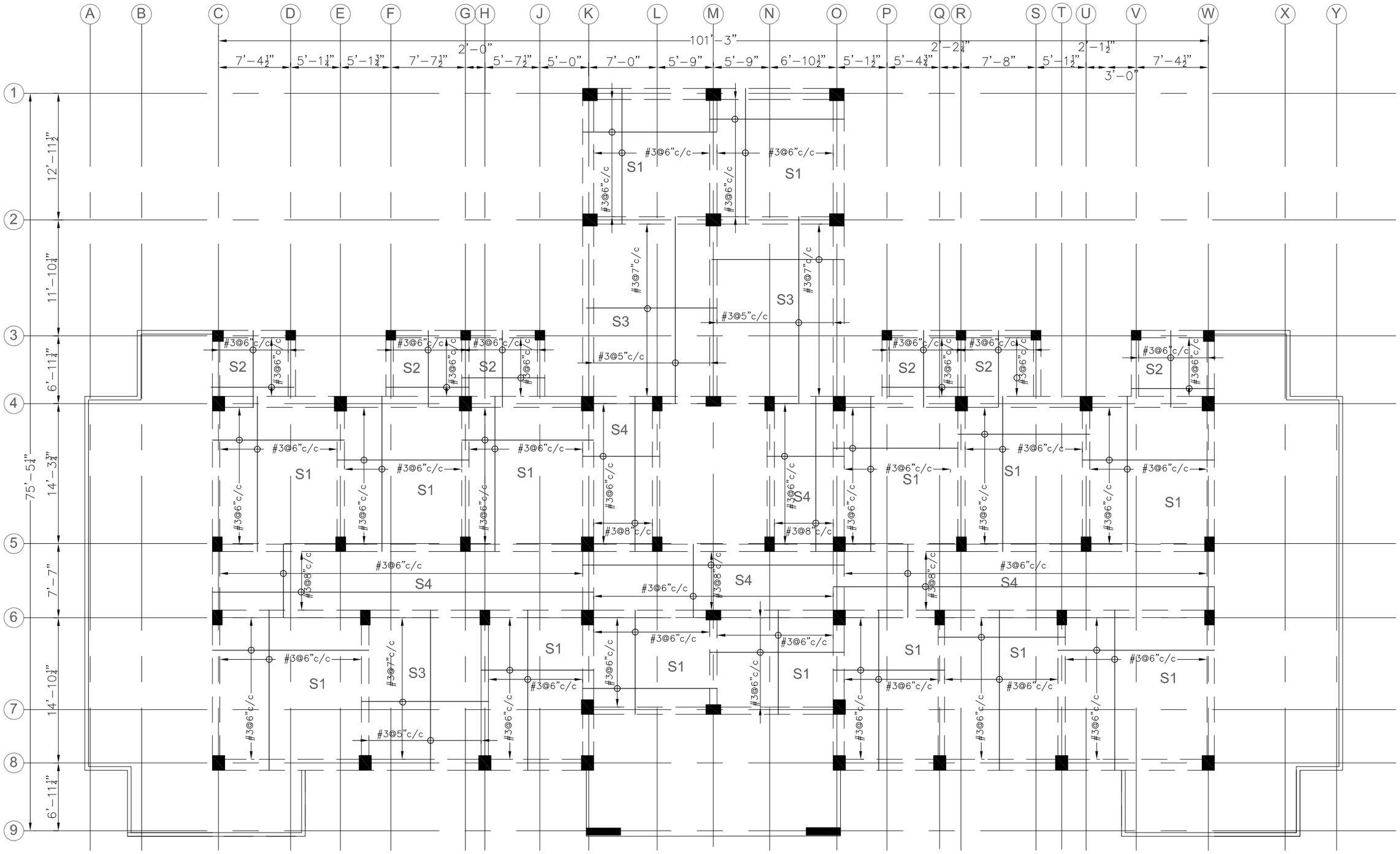

FIRST FLOOR SLAB LAYOUT

POSITIVE REINFORCEMENT DETAIL

SLAB THICKNESS = 6" (EXCEPT WHERE AS NOTED)

ADDITION & REVISION					
ADD./REV. NO.	DATE	DESCRIPTION	DES. BY	CHK. BY	APP. BY

DESIGNER:

NEW VISION ENGINEERING CONSULTANT
Head Office: Office No.B-6 Second Floor Masood Arcade
IJP Road Islamabad.
Ph: +92-51-4848375, Fax: +92-51-4848375
Email: newvisionec@yahoo.com

Regional Office: 287-A Street # 6, Cavalry Ground ,Lahore
Ph: +92-42-37250130

PROJECT:

"PROVISION OF MISSING FACILITIES FOR THE SHAIKH AYAZ UNIVERSITY SHIKARPUR"

TITLE OF DRAWING:

FIRST FLOOR SLAB LAYOUT
POSITIVE REINFORCEMENT DETAIL

CLIENT:

SHAIKH AYAZ UNIVERSITY SHIKARPUR

DESIGNED BY:	AK	APPROVED BY:	MR	DATE.	MARCH, 2022
DRAWN BY:	RIZ	JOB NO.		SCALE:	AS SHOWN
CHECKED BY:	MF	DRG. NO.	ST-21		

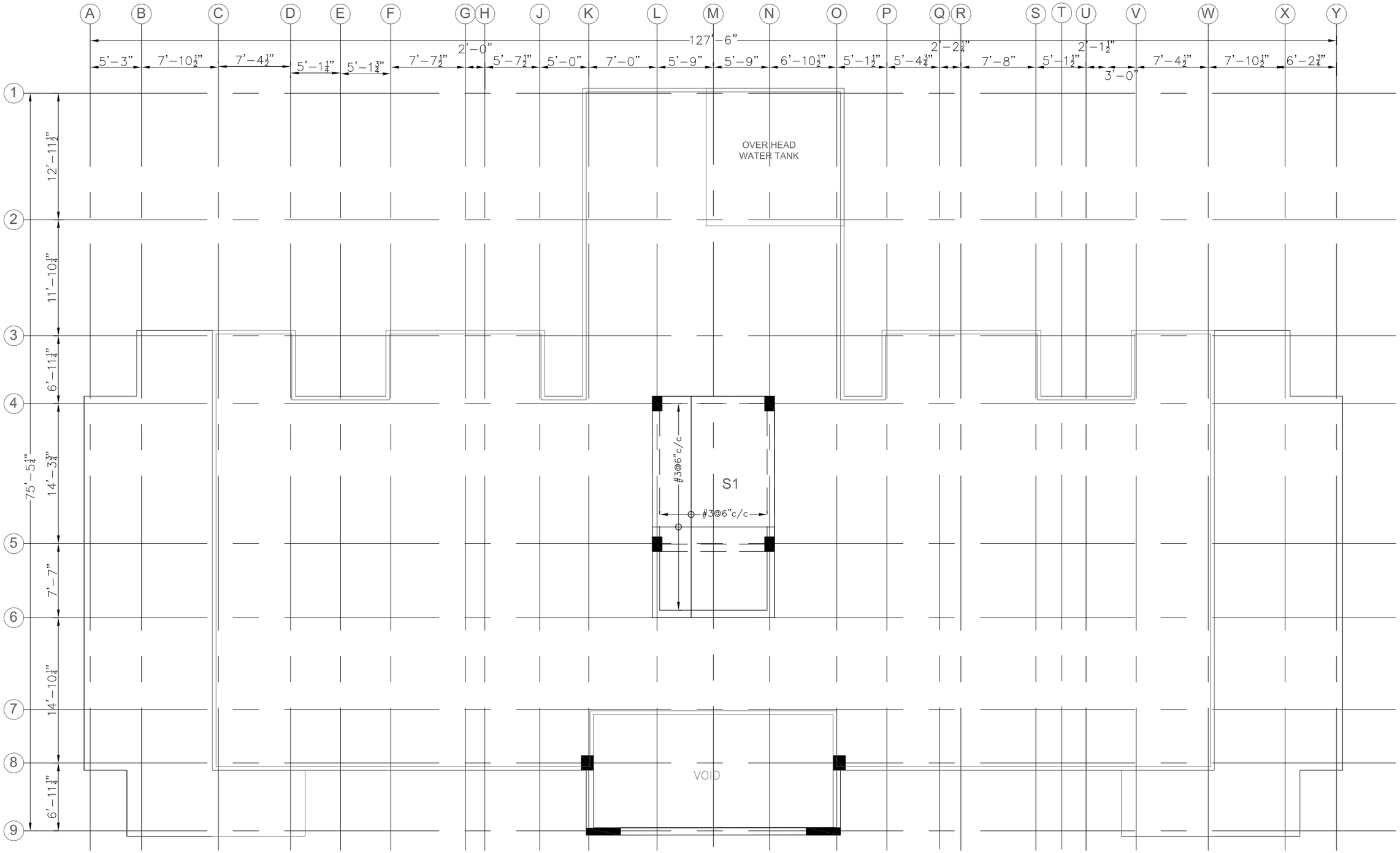

MUMTY SLAB LAYOUT

POSITIVE REINFORCEMENT DETAIL

SLAB THICKNESS = 6" (EXCEPT WHERE AS NOTED)

ADDITION & REVISION					
ADD./REV. NO.	DATE	DESCRIPTION	DES. BY	CHK. BY	APP. BY

DESIGNER:

NEW VISION ENGINEERING CONSULTANT

Head Office: Office No.B-6 Second Floor Masood Arcade
IJP Road Islamabad.
Ph: +92-51-4848375, Fax: +92-51-4848375
Email: newvisionec@yahoo.com

Regional Office: 287-A Street # 6, Cavalry Ground ,Lahore
Ph: +92-42-37250130

PROJECT:

"PROVISION OF MISSING FACILITIES FOR THE SHAIKH AYAZ UNIVERSITY SHIKARPUR"

TITLE OF DRAWING:

MUMTY SLAB LAYOUT
POSITIVE REINFORCEMENT DETAIL

CLIENT:

SHAIKH AYAZ UNIVERSITY SHIKARPUR

DESIGNED BY:	AK	APPROVED BY:	MR	DATE.	MARCH, 2022
DRAWN BY:	RIZ	JOB NO.		SCALE:	AS SHOWN
CHECKED BY:	MF	DRG. NO.	ST-22		

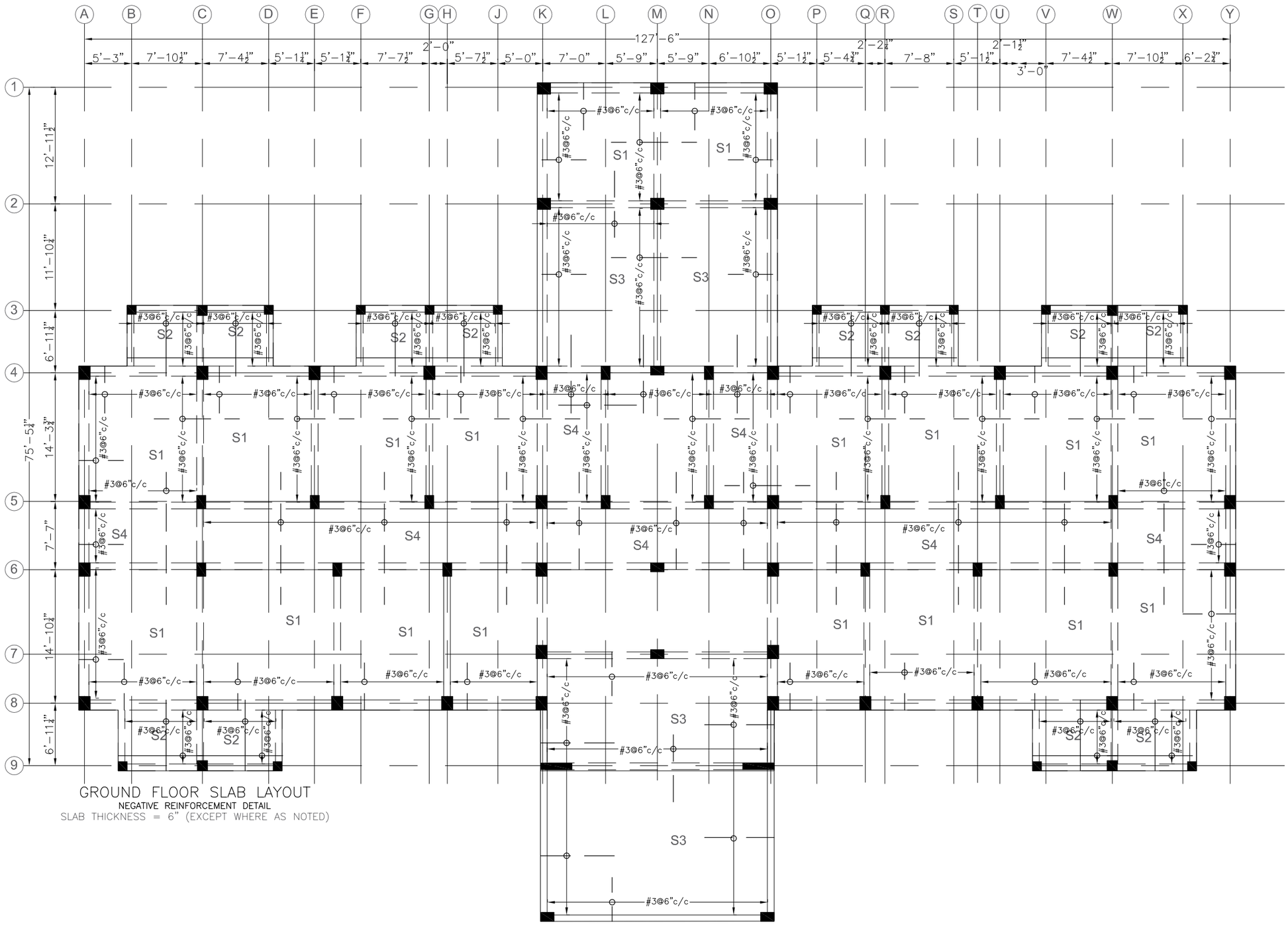

GROUND FLOOR SLAB LAYOUT

NEGATIVE REINFORCEMENT DETAIL

SLAB THICKNESS = 6" (EXCEPT WHERE AS NOTED)

ADDITION & REVISION					
ADD./REV. NO.	DATE	DESCRIPTION	DES. BY	CHK. BY	APP. BY

DESIGNER:

NEW VISION ENGINEERING CONSULTANT

Head Office: Office No.B-6 Second Floor Masood Arcade
IJP Road Islamabad.
Ph: +92-51-4848375, Fax: +92-51-4848375
Email: newvisionec@yahoo.com

Regional Office: 287-A Street # 6, Cavalry Ground ,Lahore
Ph: +92-42-37250130

PROJECT:

"PROVISION OF MISSING FACILITIES FOR THE SHAIKH AYAZ UNIVERSITY SHIKARPUR"

TITLE OF DRAWING:

GROUND FLOOR SLAB LAYOUT
NEGATIVE REINFORCEMENT DETAIL

CLIENT:

SHAIKH AYAZ UNIVERSITY SHIKARPUR

DESIGNED BY:	AK	APPROVED BY:	MR	DATE.	MARCH, 2022
DRAWN BY:	RIZ	JOB NO.		SCALE:	AS SHOWN
CHECKED BY:	MF	DRG. NO.	ST-23		

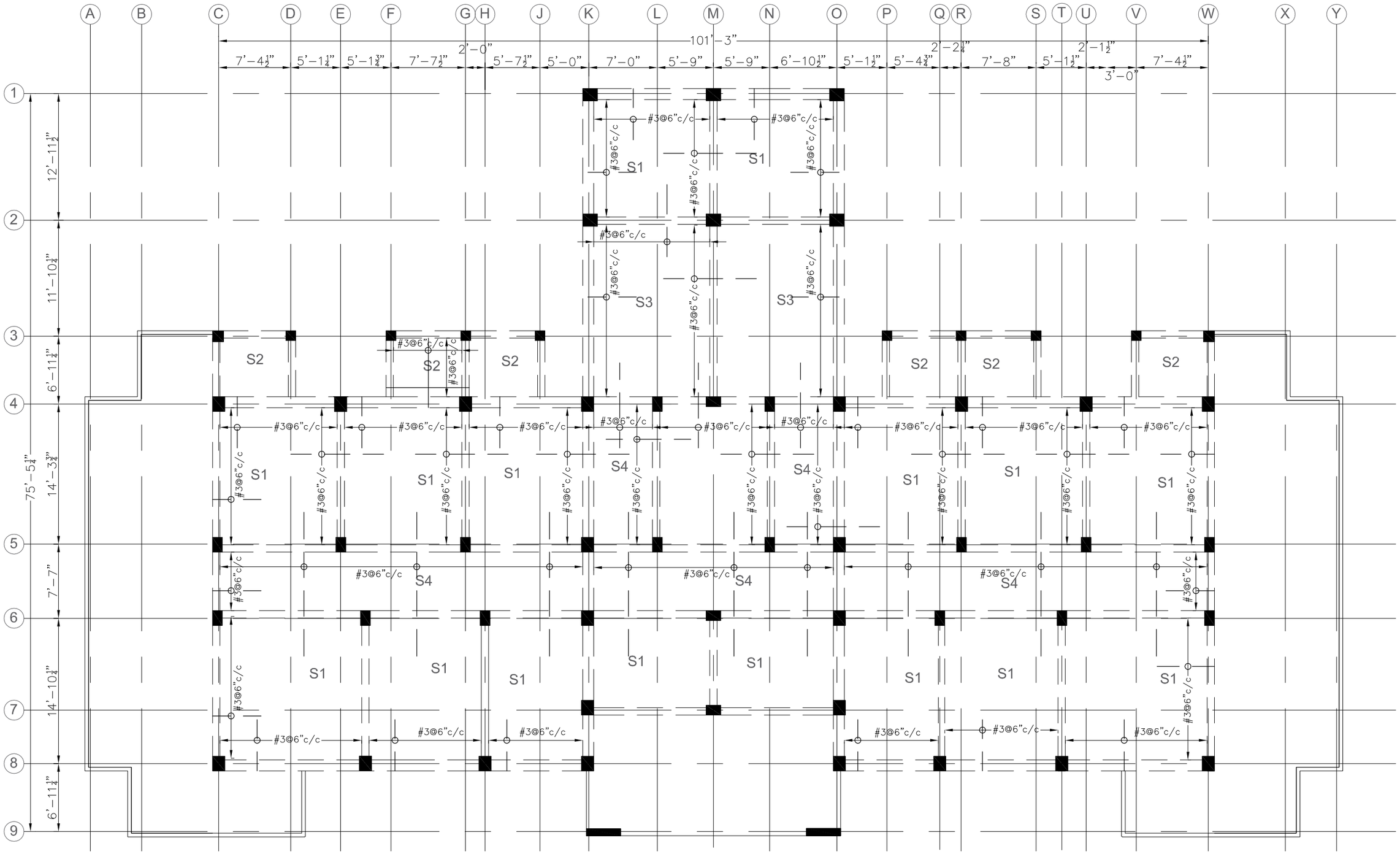

FIRST FLOOR SLAB LAYOUT

NEGATIVE REINFORCEMENT DETAIL

SLAB THICKNESS = 6" (EXCEPT WHERE AS NOTED)

ADDITION & REVISION					
ADD./REV. NO.	DATE	DESCRIPTION	DES. BY	CHK. BY	APP. BY

DESIGNER:

NEW VISION ENGINEERING CONSULTANT

Head Office: Office No.B-6 Second Floor Masood Arcade
IJP Road Islamabad.
Ph: +92-51-4848375, Fax: +92-51-4848375
Email: newvisionec@yahoo.com

Regional Office: 287-A Street # 6, Cavalry Ground ,Lahore
Ph: +92-42-37250130

PROJECT:

"PROVISION OF MISSING FACILITIES FOR THE SHAIKH AYAZ UNIVERSITY SHIKARPUR"

TITLE OF DRAWING:

FIRST FLOOR SLAB LAYOUT
NEGATIVE REINFORCEMENT DETAIL

CLIENT:

SHAIKH AYAZ UNIVERSITY SHIKARPUR

DESIGNED BY:	AK	APPROVED BY:	MR	DATE.	MARCH, 2022
DRAWN BY:	RIZ	JOB NO.		SCALE:	AS SHOWN
CHECKED BY:	MF	DRG. NO.	ST-24		

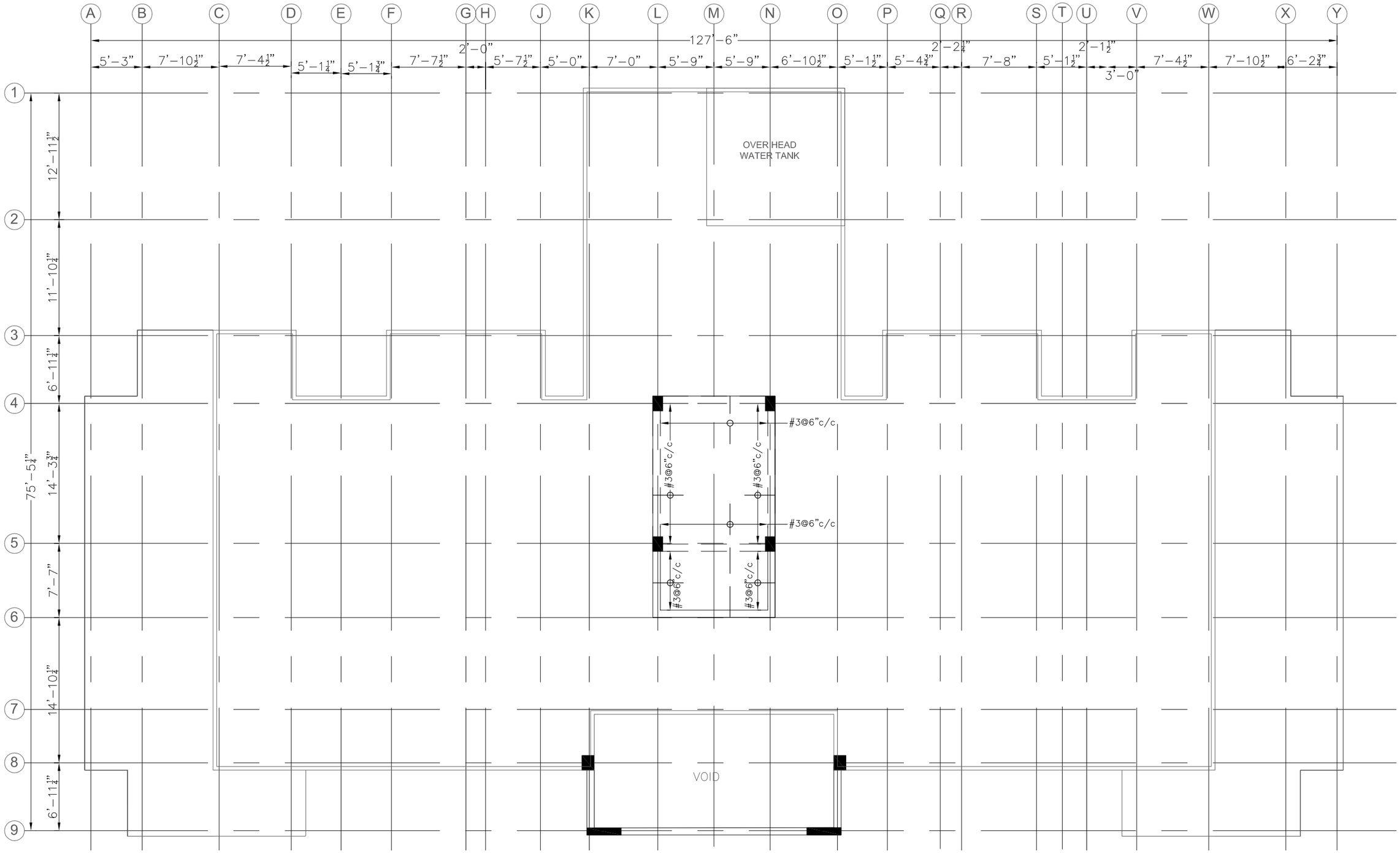

MUMTY SLAB LAYOUT

NEGATIVE REINFORCEMENT DETAIL

SLAB THICKNESS = 6" (EXCEPT WHERE AS NOTED)

ADD./REV. NO.	DATE	DESCRIPTION	DES. BY	CHK. BY	APP. BY

ADDITION & REVISION

DESIGNER:

NEW VISION ENGINEERING CONSULTANT
Head Office: Office No.B-6 Second Floor Masood Arcade
IJP Road Islamabad.
Ph: +92-51-4848375, Fax: +92-51-4848375
Email: newvisionec@yahoo.com

Regional Office: 287-A Street # 6, Cavalry Ground ,Lahore
Ph: +92-42-37250130

PROJECT:
"PROVISION OF MISSING FACILITIES FOR THE SHAIKH AYAZ UNIVERSITY SHIKARPUR"

TITLE OF DRAWING:
MUMTY SLAB LAYOUT
NEGATIVE REINFORCEMENT DETAIL

CLIENT:
SHAIKH AYAZ UNIVERSITY SHIKARPUR

DESIGNED BY:	AK	APPROVED BY:	MR	DATE.	MARCH, 2022
DRAWN BY:	RIZ	JOB NO.		SCALE:	AS SHOWN
CHECKED BY:	MF	DRG. NO.	ST-25		

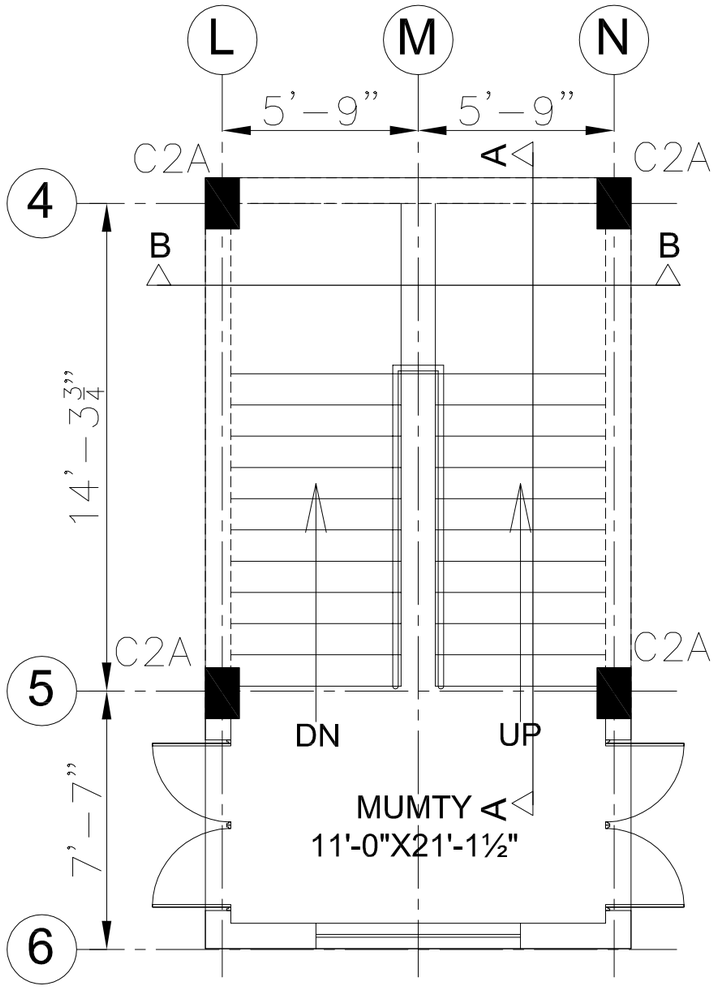

STAIRCASE PLAN

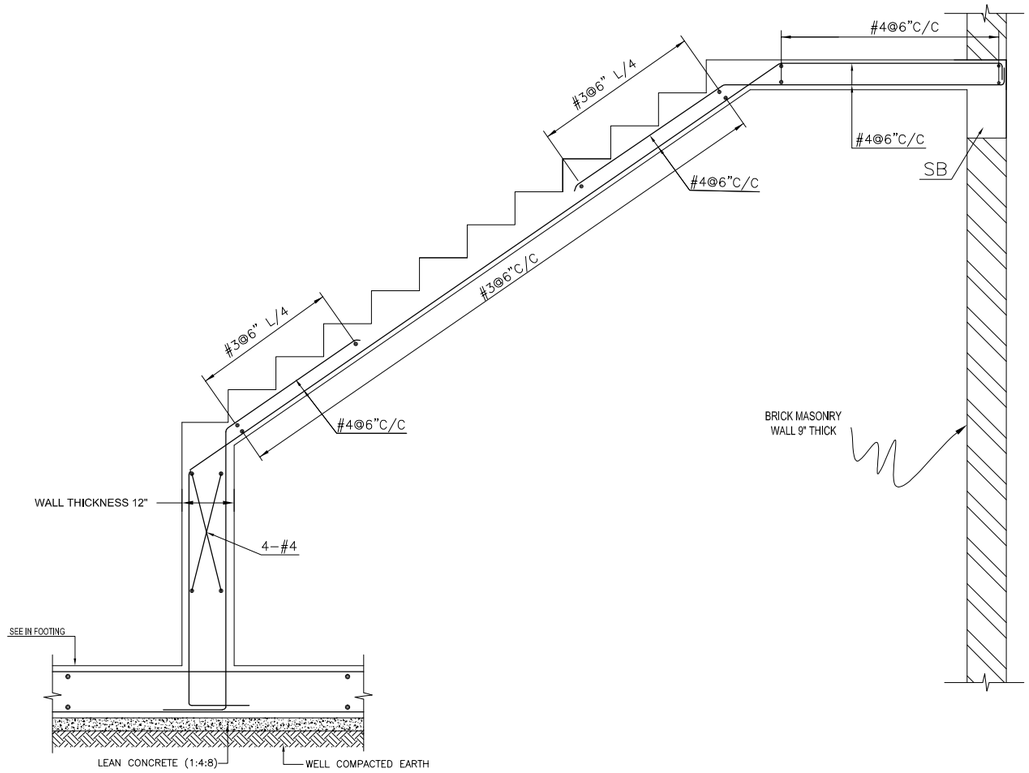

SECTION A-A

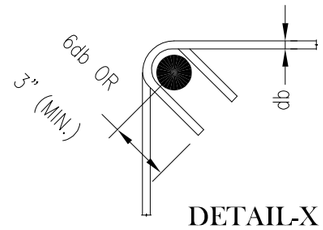

DETAIL-X
TYP. 135° HOOK DETAIL
FOR TIES & STIRRUPS

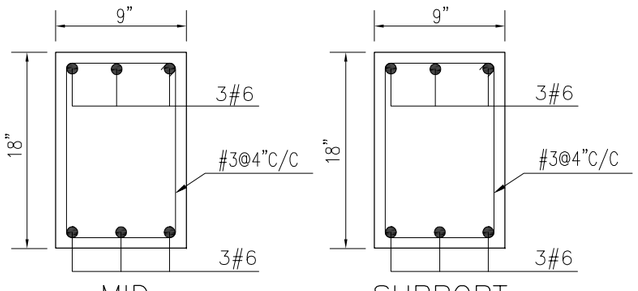

MID
SEC. OF SB

SUPPORT
SEC. OF SB

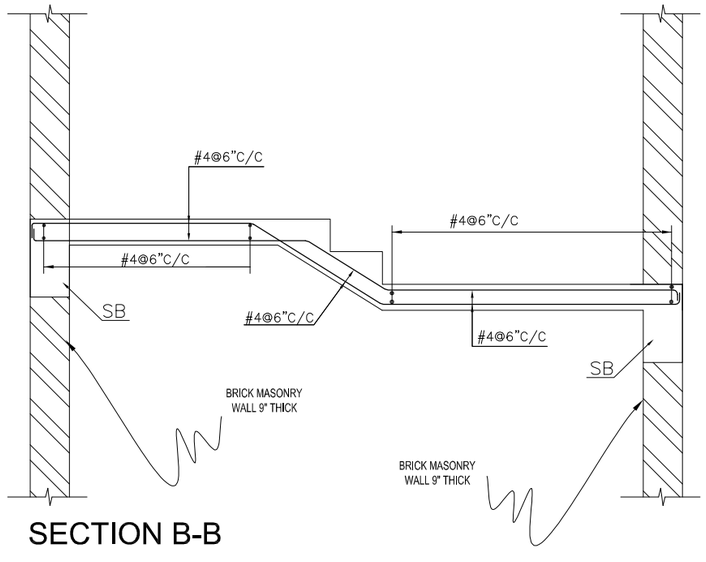

SECTION B-B

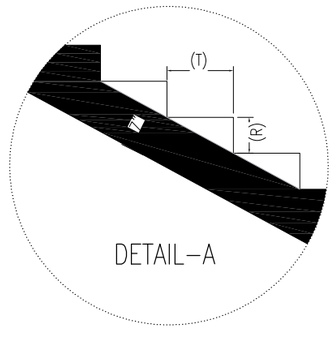

DETAIL-A

ADDITION & REVISION					
ADD./REV. NO.	DATE	DESCRIPTION	DES. BY	CHK. BY	APP. BY

DESIGNER:

NEW VISION ENGINEERING CONSULTANT
Head Office: Office No.B-6 Second Floor Masood Arcade
IJP Road Islamabad.
Ph: +92-51-4848375, Fax: +92-51-4848375
Email: newvisionec@yahoo.com

Regional Office: 287-A Street # 6, Cavalry Ground ,Lahore
Ph: +92-42-37250130

PROJECT:
"PROVISION OF MISSING FACILITIES FOR THE SHAIKH AYAZ UNIVERSITY SHIKARPUR"

TITLE OF DRAWING:
TYPICAL STAIR DETAIL

CLIENT:
SHAIKH AYAZ UNIVERSITY SHIKARPUR

DESIGNED BY:	AK	APPROVED BY:	MR	DATE.	MARCH, 2022
DRAWN BY:	RIZ	JOB NO.		SCALE:	AS SHOWN
CHECKED BY:	MF	DRG. NO.	ST-26		

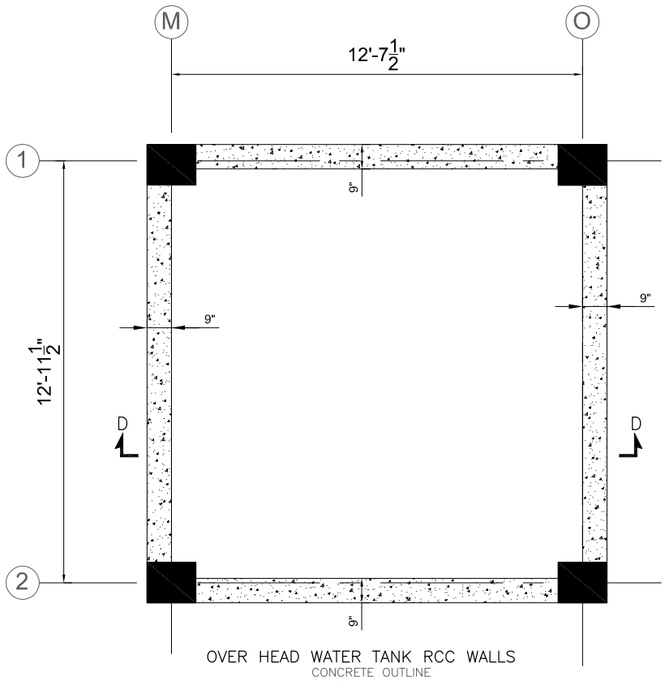

OVER HEAD WATER TANK RCC WALLS
CONCRETE OUTLINE
WALL THICKNESS = 9"

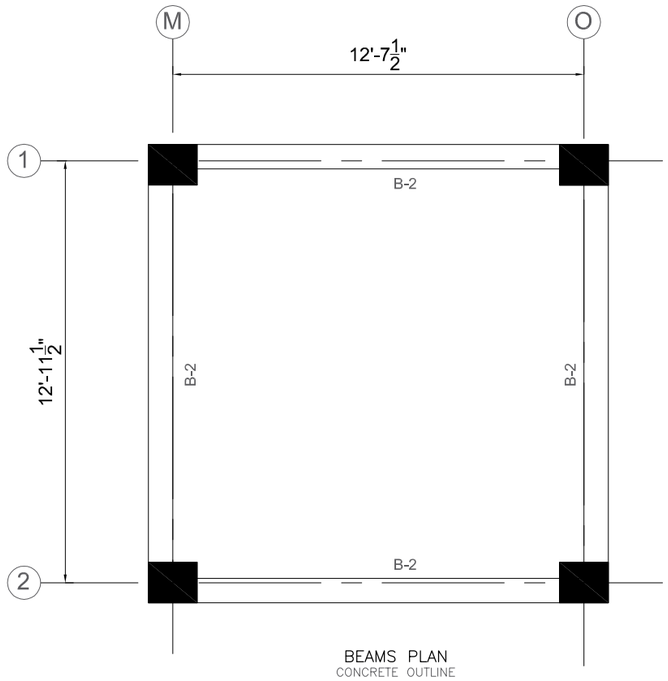

BEAMS PLAN
CONCRETE OUTLINE

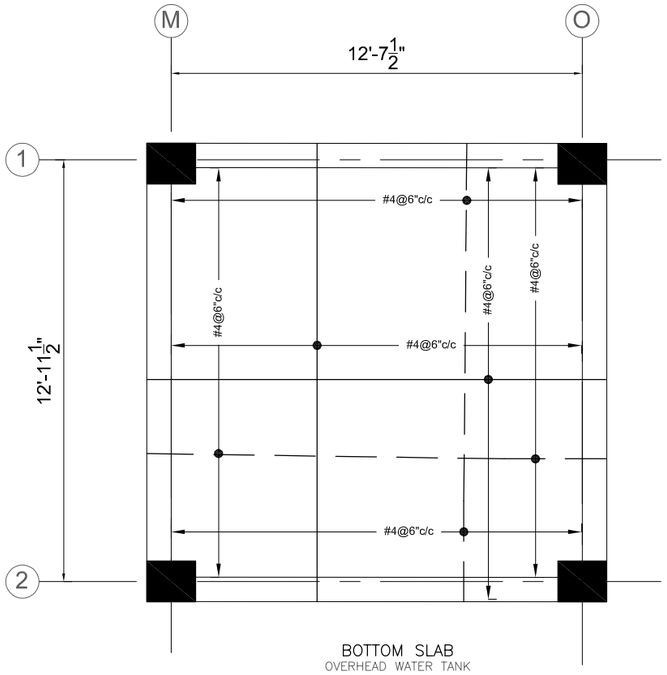

BOTTOM SLAB
OVERHEAD WATER TANK
SLAB THICKNESS = 7"

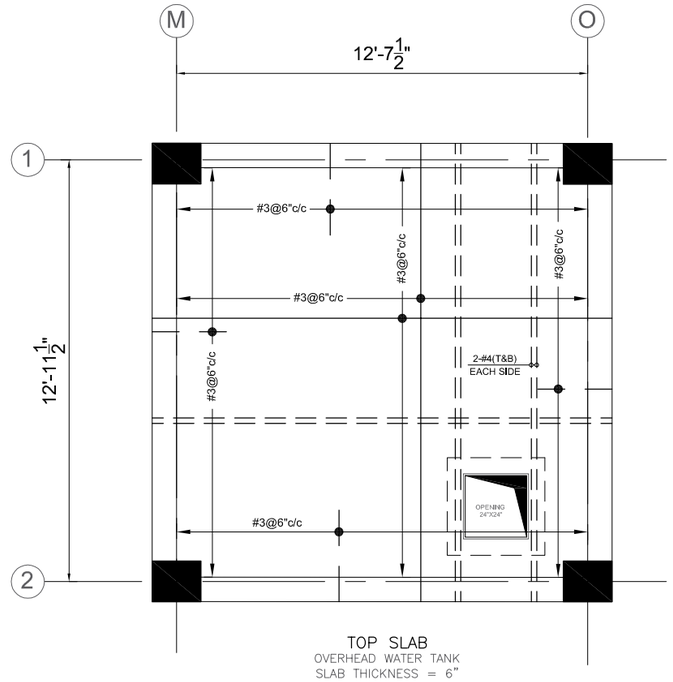

TOP SLAB
OVERHEAD WATER TANK
SLAB THICKNESS = 6"

ADDITION & REVISION					
ADD./REV. NO.	DATE	DESCRIPTION	DES. BY	CHK. BY	APP. BY

DESIGNER:

NEW VISION ENGINEERING CONSULTANT
Head Office: Office No.B-6 Second Floor Masood Arcade
IJP Road Islamabad.
Ph: +92-51-4848374, Fax: +92-51-4848375
Email: newvisionec@yahoo.com
Regional Office: House # 98/4-2,Gardan Town,lahore
Ph: +92-42-35911695, Email: newvision761@yahoo.com

PROJECT:
"PROVISION OF MISSING FACILITIES FOR THE SHAIKH AYAZ UNIVERSITY SHIKARPUR"

TITLE:
O.H.W.TANK DETAIL-1

CLIENT:
SHAIKH AYAZ UNIVERSITY SHIKARPUR

DESIGNED BY: ENG. AHSAN	APPROVED BY:	DATE : MARCH, 2022
DRAWN BY: RIZWAN	JOB NO.	SCALE: N.T.S
DRG. NO. ST-27		

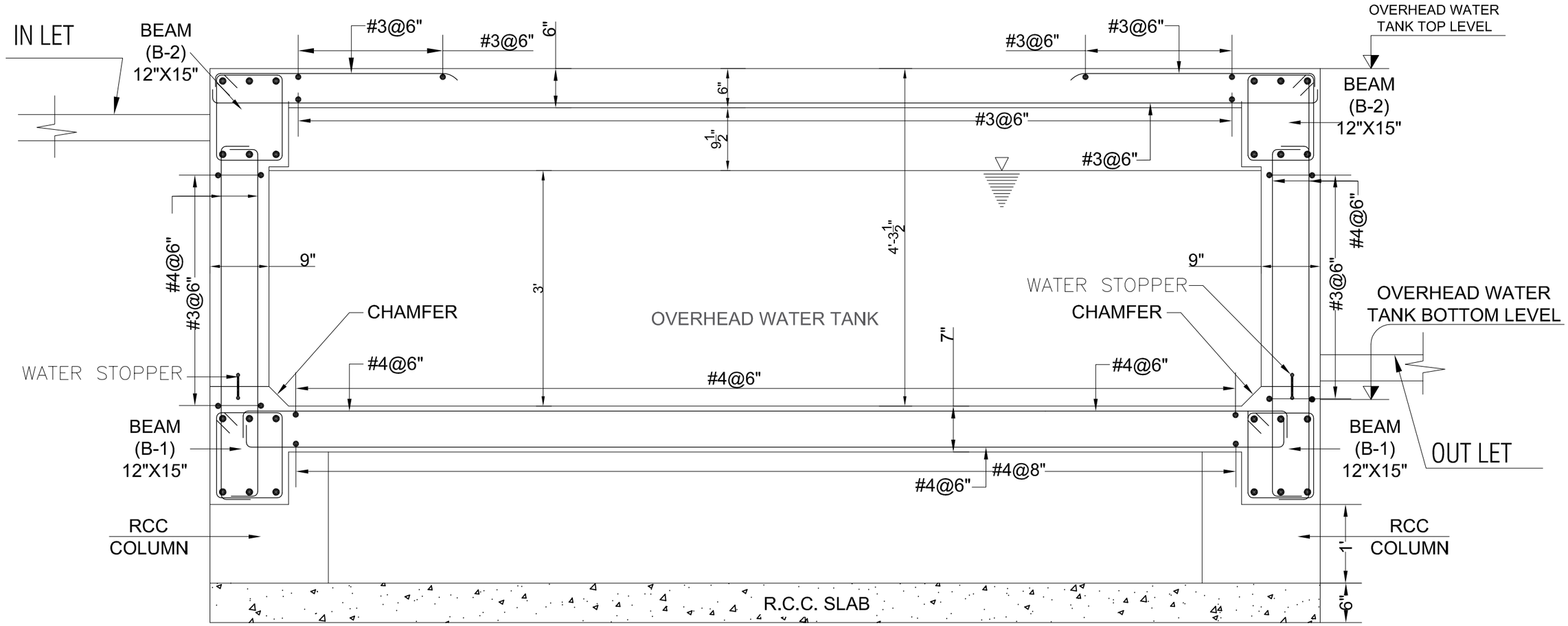

SECTION D–D

OVERHEAD WATER TANK

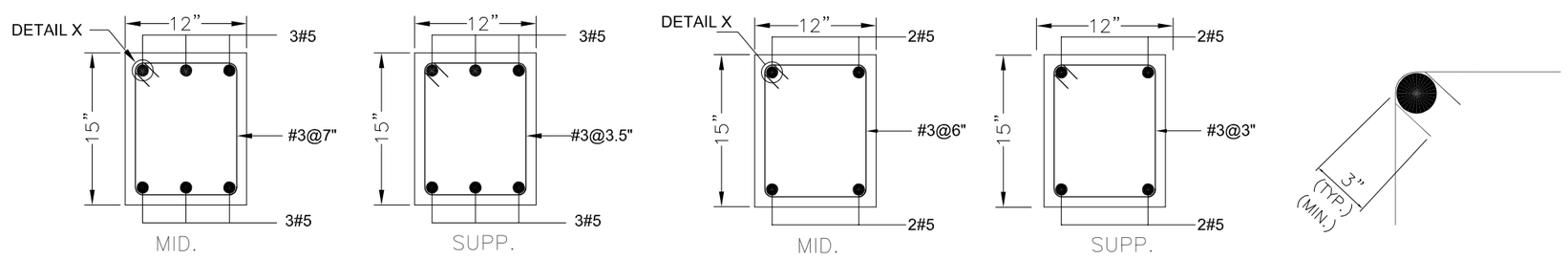

TYPICAL SEC. OF B–1

TYPICAL SEC. OF B–2

DETAIL 'X'

ADDITION & REVISION					
ADD./REV. NO.	DATE	DESCRIPTION	DES. BY	CHK. BY	APP. BY

DESIGNER:

NEW VISION ENGINEERING CONSULTANT
Head Office: Office No.B-6 Second Floor Masood Arcade IJP Road Islamabad.
Ph: +92-51-4848374, Fax: +92-51-4848375
Email: newvisionec@yahoo.com
Regional Office: House # 98/4-2,Gardan Town,lahore
Ph: +92-42-35911695, Email: newvision761@yahoo.com

PROJECT:
"PROVISION OF MISSING FACILITIES FOR THE SHAIKH AYAZ UNIVERSITY SHIKARPUR"

TITLE:
O.H.W.TANK DETAIL-2

CLIENT:
SHAIKH AYAZ UNIVERSITY SHIKARPUR

DESIGNED BY: ENG. AHSAN	APPROVED BY:	DATE : MARCH, 2022
DRAWN BY: RIZWAN	JOB NO.	SCALE: N.T.S
DRG. NO. ST-28		

ELECTRICAL

LIST OF DRAWINGS

S.NO.	DRAWING TITLE	DRG. NO
	ELECTRICAL DRAWINGS	
1	LIST OF DRAWING	EL-00
2	GENERAL NOTES	EL-01
3	LEGEND AND SYMBOLS	EL-02
4	EARTHING DETAIL	EL-03
5	DB PLANS	EL-04
6	TYPICAL DETAIL-01	EL-05
7	TYPICAL DETAIL-02	EL-06
8	GROUND FLOOR PLAN (LIGHTING LAYOUT)	EL-07
9	FIRST FLOOR PLAN (LIGHTING LAYOUT)	EL-08
10	GROUND FLOOR PLAN (POWER LAYOUT)	EL-09
11	FIRST FLOOR PLAN (POWER LAYOUT)	EL-10
12	GROUND FLOOR PLAN (SMOKE DETECTOR LAYOUT)	EL-11
13	FIRST FLOOR PLAN (SMOKE DETECTOR LAYOUT)	EL-12

ADDITION & REVISION

ADD./REV. NO.	DATE	DESCRIPTION	DES. BY	CHK. BY	APP. BY

DESIGNER:

NEW VISION ENGINEERING CONSULTANT
Head Office: Office No.B-6 SECOND FLOOR Masood Arcade
IJP Road Islamabad.
Ph: +92-51-4848375, Fax: +92-51-4848375
Email: newvisionec@yahoo.com
Regional Office: 287-A Street # 6, Cavalry Ground ,Lahore
Ph: +92-42-37250130

PROJECT:
"PROVISION OF MISSING FACILITIES FOR THE SHAIKH AYAZ UNIVERSITY SHIKARPUR"

TITLE:
LIST OF DRAWINGS

CLIENT:
SHAIKH AYAZ UNIVERSITY SHIKARPUR

DESIGNED BY: ENG.SHADAB	APPROVED BY:	DATE : MARCH, 2022
DRAWN BY: RIZWAN	JOB NO.	SCALE: N.T.S
DRG. NO. EL-00		

G E N E R A L N O T E S

ELECTRICAL SYSTEMS

1. FOLLOWING NOTES SHALL IN GENERAL APPLY TO ALL ELECTRICAL DRAWINGS. THE INSTRUCTIONS IN THESE NOTES SHALL BE FOLLOWED UNLESS STATED OTHERWISE.
2. THESE NOTES SHALL BE APPLICABLE TO THE ENTIRE ELECTRICAL WORKS. IF THE SITE CONDITIONS NECESSITATE ANY ALTERATIONS OR DEVIATIONS THE DIRECTIONS OF THE ENGINEER SHALL BE OBSERVED AS FINAL INSTRUCTIONS.
3. ALL ELECTRICAL DRAWINGS SHALL BE READ IN CONJUNCTION WITH BOQ, TECHNICAL SPECIFICATIONS, ARCHITECTURAL, STRUCTURAL, PLUMBING AND HVAC DRAWINGS & ALL OTHER RELEVANT DETAILS.
4. DIMENSIONS/MEASUREMENTS GIVEN IN LAYOUT AND DETAILED DRAWINGS ARE APPROXIMATE. THE CONTRACTOR SHALL BE RESPONSIBLE TO CALCULATE THE ACTUAL DIMENSIONS/ MEASUREMENTS ACCORDING TO STRUCTURAL AND ARCHITECTURAL DRAWINGS.
5. THE CONTRACTOR SHALL SUBMIT SHOP DRAWINGS WITH ALL RELEVANT DETAILS TO THE ENGINEER FOR APPROVAL ACCORDING TO THE GENERAL CONDITIONS OF CONTRACT WELL IN TIME BEFORE COMMENCEMENT OF THAT WORK.
6. PROPER CO-ORDINATION OF ELECTRICAL WORKS WITH OTHER SERVICES SHALL BE CARRIED OUT AT SITE.
7. ALL NON - CURRENT CARRYING PARTS i.e. OUTER CASINGS OF EQUIPMENT SUCH AS HT & LT PANELS, DISTRIBUTIONS BOARDS, CABLE TRAYS, AUXILIARY CONSTRUCTIONS FOR EQUIPMENT ETC. SHALL BE CONNECTED TO THE GROUNDING/ EARTHING SYSTEM AT REQUIRED NUMBER OF POINTS WITH SPECIFIED SIZES OF CONDUCTORS. WATER PIPES ALONG ELECTRICAL LINE SHALL BE BONDED TO THE EARTHING SYSTEM WITH 10 sq.mm. SINGLE CORE, COPPER CONDUCTOR PVC CABLE.
8. ELECTRICAL POINTS FOR EQUIPMENT SHALL BE INSTALLED IN CO-ORDINATION WITH THE RELEVANT DRAWINGS OF OTHER SERVICES, SUCH AS COMMUNICATION SYSTSMS, HVAC, PLUMBING ETC. THE LOCATION ON ELECTRICAL DRAWINGS IS ONLY INDICATIVE.
9. ARRANGEMENT OF ELECTRICAL EQUIPMENTS ON ELECTRICAL DRAWINGS ARE TENTATIVE. EXACT ARRANGEMENT OF EQUIPMENTS SHALL BE MADE IN VIEW OF ITS PHYSICAL DIMENSIONS AND EASE OF MAINTENANCE. AND AS PER SITE REQUIREMENTS.
10. LOADS ON ALL PHASES SHALL BE BALANCED AT THE TESTING/ COMMISSIONING STAGE.
11. CONDUIT/DUCT RUN UNDER FLOOR SHALL HAVE A MINIMUM COVER OF TWO INCHES FROM TOP OF CONDUIT/DUCT TO FINISH FLOOR LEVEL.
12. RUN GREEN-YELLOW OR GREEN SINGLE CORE PVC INSULATED COPPER CONDUCTOR CABLE OF SPECIFIED SIZES AS PROTECTIVE EARTH CONDUCTOR (ECC) ALL ALONG LIGHT AND POWER WIRING. WHEREVER THE SIZE IS NOT SPECIFIED THE FOLLOWING CRITERIA SHALL BE OBSERVED TO DETERMINE MINIMUM CROSS SECTIONAL AREA OF EARTH CONTINUITY CONDUCTOR (ECC) IN RELATION TO THE AREA OF ITS PHASE CONDUCTORS. RUN SEPARATE ECC FOR EACH CIRCUIT.
   - ECC & PHASE CONDUCTOR OF SAME SIZE FOR UPTO AND INCLUDING 16 SQMM CABLES
   - 16 SQMM ECC FOR PHASE CONDUCTOR OF 16 SQMM, 25SQMM & 35 SQMM CABLES
   - FOR CABLES OF 50 SQMM AND ABOVE SIZES, ECC IS HALF SIZE OF PHASE CONDUCTOR.
   - MAXIMUM SIZE OF ECC IS 70 SQMM.

ELECTRICAL SYSTEMS

13. THE MAXIMUM CAPACITY OF PVC CONDUITS FOR SIMULTANEOUS DRAWING OF PVC INSULATED CABLES SHALL BE DETERMINED AS PER BS 4607. THE FOLLOWING TABLE SHALL BE USED TO DETERMINE THE MAXIMUM NUMBER OF CABLES.

S. #	NOMINAL CONDUCTOR SIZE(SQMM)	NO. & DIA OF WIRES	NOMINAL OVERALL DIA	20 MM DIA (3/4" DIA)	25 MM DIA (1" DIA)	32 MM DIA (1¼ " DIA)
1	1.5	1/1.38	3.1	10	18	30
2	2.5	1/1.78	3.5	8	14	23
3	2.5	7/0.67	3.8	7	12	20
4	4	7/0.85	4.3	5	9	15
5	6	7/1.04	4.9	4	7	12
6	10	7/1.35	6.2	2	4	7
7	16	7/1.70	7.3	-	3	5
8	25	7/2.14	9.0	-	2	3
9	35	19/1.53	10.3	-	-	2

14. NORMAL & EMERGENCY CIRCUITS SHALL RUN IN SEPARATE CONDUITS.
15. ALL WIRING FOR CONTROLS SHALL BE CARRIED OUT WITH 1 CORE PVC CABLES OF SPECIFIED VOLTAGE GRADE AND SIZES.
16. THE WIRING SHALL BE CONTINUOUS LOOPING-IN TYPE AND NO JOINT IN WIRES SHALL BE ALLOWED.
17. THE WIRING SYSTEM SHALL BE CARRIED OUT ONLY AFTER THE CONDUIT SYSTEM IS COMPLETELY INSTALLED AND ALL OUTLET BOXES, ETC. ARE FIXED IN POSITION.
18. MOUNTING HEIGHTS OF ELECTRICAL FITTINGS WHEN MEASURED FROM FINISHED FLOOR LEVEL (F.F.L.) TO THE BOTTOM OF FITTINGS SHALL BE AS UNDER, UNLESS OTHERWISE SHOWN OR INSTRUCTED.

MAIN SWITCH BOARD		48 INCHES
DISTRIBUTION BOARD		48 INCHES
CONTROL PANEL		48 INCHES
ON/OFF PUSH BUTTON STATION		48 INCHES
DIMMER CONTROL UNIT		48 INCHES
LIGHT CONTROL SWITCH	(ONE WAY/TWO WAY)	48 INCHES
5A SOCKET OUTLETS IN	GENERAL AREAS	10 INCHES
15A SOCKET OUTLETS IN	GENERAL AREAS	10 INCHES
20A SOCKET OUTLETS IN	GENERAL AREAS	10 INCHES
15A SOCKET OUTLETS IN KITCHEN	(ABOVE COUNTER)	10 INCHES
15A SOCKET OUTLETS IN TOILETS		66 INCHES
16A TP 5PIN INDUSTRIAL SOCKET OUTLETS IN LABS.		48 INCHES
32A TP 5PIN INDUTRIAL SOCKET OUTLETS IN LABS		48 INCHES
63A TP 5PIN INDUTRIAL SOCKET OUTLETS IN LABS.		48 INCHES
CEILING FAN		96 INCHES
WALL FAN		84 INCHES
EXHAUST FAN		REFER ARCH. DRGS.

COMMUNICATION SYSTEMS

1. FOLLOWING NOTES SHALL IN GENERAL APPLY TO ALL COMMUNICATION SYSTEMS DRAWINGS. THE INSTRUCTIONS IN THESE NOTES SHALL BE FOLLOWED UNLESS STATED OTHERWISE.
2. THESE NOTES SHALL BE APPLICABLE TO THE ENTIRE COMMUNICATION SYSTEMS WORKS. IF THE SITE CONDITIONS NECESSITATE ANY ALTERATIONS OR DEVIATIONS THE DIRECTIONS OF THE ENGINEER SHALL BE OBSERVED AS FINAL INSTRUCTIONS.
3. ALL COMMUNICATION SYSTEMS DRAWINGS SHALL BE READ IN CONJUNCTION WITH TECHNICAL SPECIFICATIONS, ITEMS OF B.O.Q., ARCHITECTURAL STRUCTURAL, HVAC, PLUMBING DRAWINGS AND ALL OTHER RELEVANT DETAILS.
4. DIMENSIONS/MEASUREMENTS GIVEN IN LAYOUT AND DETAILED DRAWINGS ARE APPROXIMATE. THE CONTRACTOR SHALL BE RESPONSIBLE TO CALCULATE THE ACTUAL DIMENSIONS/MEASUREMENTS ACCORDING TO STRUCTURAL AND ARCHITECTURAL DRAWINGS.
5. THE CONTRACTOR SHALL SUBMIT SHOP DRAWINGS WITH ALL RELEVANT DETAILS TO THE ENGINEER FOR APPROVAL ACCORDING TO THE GENERAL CONDITIONS OF CONTRACT WELL IN TIME BEFORE COMMENCEMENT OF THAT WORK.
6. PROPER CO-ORDINATION OF COMMUNICATION SYSTEMS WORKS WITH OTHER SERVICES SHALL BE CARRIED OUT AT SITE.
7. TELEPHONE SYSTEM SHALL BE COMPLETE WITH INSTRUMENTS, EQUIPMENT AND INTERCONNECTING WIRING, TELEPHONE EXCHANGE, TELEPHONE OUTLETS, JUNCTION BOXES, CONDUITS OF SPECIFIED SIZES IN THE BUILDING, AND UNDERGROUND PIPES OF SPECIFIED SIZES SHOWN ON DRAWINGS SHALL BE PROVIDED. WHERE SIZE OF CONDUIT/PIPE IS NOT SPECIFIED SUITABLE SIZE SHALL BE INSTALLED AS DIRECTED BY THE ENGINEER.
8. POINTS FOR COMMUNICATION SYSTEMS EQUIPMENT SHALL BE INSTALLED IN CO-ORDINATION WITH THE RELEVANT DRAWINGS OF OTHER SERVICES, SUCH AS ELECTRICAL, HVAC, PLUMBING ETC. THE LOCATION ON COMMUNICATION SYSTEMS DRAWINGS IS ONLY INDICATIVE.
9. ARRANGEMENT OF COMMUNICATION SYSTEMS EQUIPMENTS ON DRAWINGS ARE TENTATIVE EXACT ARRANGEMENT OF EQUIPMENTS SHALL BE MADE IN VIEW OF ITS PHYSICAL DIMENSIONS AND EASE OF MAINTENANCE.
10. CONDUIT/DUCT RUN UNDER FLOOR SHALL HAVE A MINIMUM COVER 2 INCHES FROM TOP OF CONDUIT/DUCT TO FINISH FLOOR LEVEL.
11. RUN GREEN-YELLOW OR GREEN SINGLE CORE PVC INSULATED COPPER CONDUCTOR CABLE OF SPECIFIED SIZES AS PROTECTIVE EARTH CONDUCTOR (ECC) ALL ALONG COMMUNICATION SYSTEMS WIRING.
12. ALL WIRING FOR CONTROLS SHALL BE CARRIED OUT WITH 1 CORE PVC CABLES OF SPECIFIED VOLTAGE GRADE AND SIZES.
13. THE WIRING SHALL BE CONTINUOUS LOOPING-IN TYPE AND NO JOINT IN WIRES SHALL BE ALLOWED.
14. THE WIRING SYSTEM SHALL BE CARRIED OUT ONLY AFTER THE CONDUIT SYSTEM IS COMPLETELY INSTALLED AND ALL OUTLET BOXES, ETC. ARE FIXED IN POSITION.
15. MOUNTING HEIGHTS OF ELECTRICAL FITTINGS WHEN MEASURED FROM FINISHED FLOOR LEVEL (F.F.L.) TO THE BOTTOM OF FITTINGS SHALL BE AS UNDER, UNLESS OTHERWISE SHOWN OR INSTRUCTED.

TELEPHONE JUNCTION BOX	10 INCHES
TELEPHONE OUTLET	10 INCHES
INTERCOM CONTROL PACK	10 INCHES
INTERCOM STATION (WALL MOUNTED)	36 INCHES
FA SYSTEM CONTROL PANEL	36 INCHES
FA SYSTEM JUNCTION BOX	10 INCHES
MANUAL CALL STATION	42 INCHES
AUDIO ALARM	100 INCHES

ADDITION & REVISION

ADD./REV. NO.	DATE	DESCRIPTION	DES. BY	CHK. BY	APP. BY

DESIGNER:

NEW VISION ENGINEERING CONSULTANT
Head Office: Office No.B-6 SECOND FLOOR Masood Arcade
IJP Road Islamabad.
Ph: +92-51-4848375, Fax: +92-51-4848375
Email: newvisionec@yahoo.com
Regional Office: 287-A Street # 6, Cavalry Ground ,Lahore
Ph: +92-42-37250130

PROJECT:
"PROVISION OF MISSING FACILITIES FOR THE SHAIKH AYAZ UNIVERSITY SHIKARPUR"

TITLE:
GENERAL NOTES

CLIENT:
SHAIKH AYAZ UNIVERSITY SHIKARPUR

DESIGNED BY: ENG.SHADAB	APPROVED BY:	DATE : MARCH, 2022
DRAWN BY: RIZWAN	JOB NO.	SCALE: N.T.S
DRG. NO. EL-01		

20 Watt LED/SMD Light fixture

15 Watt LED/SMD Light fixture

56" dia ceiling fan suitable to give an air displacement of minimum 8000 Cu. ft./ min. Fan shall be made with 99% purity Copper windings.

Exhaust 12" dia plastic body

Bracket fan 18"

10 Watt LED/SMD Light fixture

15 Watt LED/SMD (Warm)Light fixture

14 Watt LED/SMD Light fixture

10–13 amps light plug

D data point

SD smoke detector

M & S manual call point & sounder

FACP Fire Alarm Control Panel

sub DB

MAIN DISTRIBUTION BOARD MDB main DB

ADDITION & REVISION					
ADD./REV. NO.	DATE	DESCRIPTION	DES. BY	CHK. BY	APP. BY

DESIGNER:

NEW VISION ENGINEERING CONSULTANT
Head Office: Office No.B-6 SECOND FLOOR Masood Arcade IJP Road Islamabad.
Ph: +92-51-4848375, Fax: +92-51-4848375
Email: newvisionec@yahoo.com
Regional Office: 287-A Street # 6, Cavalry Ground ,Lahore
Ph: +92-42-37250130

PROJECT:
"PROVISION OF MISSING FACILITIES FOR THE SHAIKH AYAZ UNIVERSITY SHIKARPUR"

TITLE:
LEGEND AND SYMBOLS

CLIENT:
SHAIKH AYAZ UNIVERSITY SHIKARPUR

DESIGNED BY: ENG.SHADAB	APPROVED BY:	DATE : MARCH, 2022
DRAWN BY: RIZWAN	JOB NO.	SCALE: N.T.S
DRG. NO. EL-02		

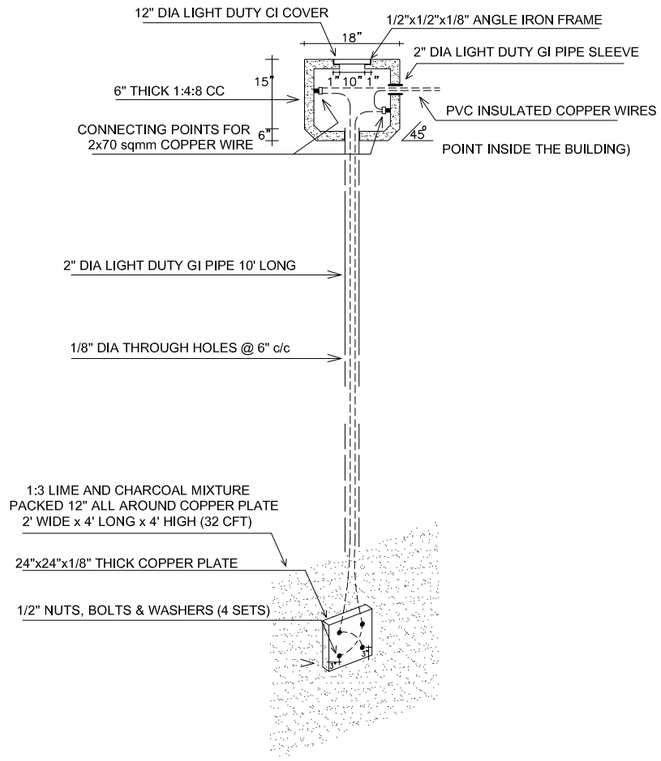

DETAIL–E–2

PLATE TYPE EARTH ELECTRODE

(FOR EARTHING OF ELECTRICAL POWER SYSTEM)

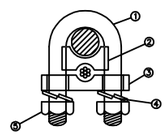

DETAIL–A

ITEM NO.	NAME	MATERIAL
1	U–BOLT	MILD STEEL
2	SPACER	CAST IRON
3	BASE	MILD STEEL
4	SPRING WASHER	CARBON STEEL
5	NUT	MILD STEEL

ALL MEASUREMENTS ARE IN MM

ADDITION & REVISION					
ADD./REV./NO.	DATE	DESCRIPTION	DES. BY	CHK. BY	APP. BY

DESIGNER:

NEW VISION ENGINEERING CONSULTANT
Head Office: Office No.B-6 SECOND FLOOR Masood Arcade
IJP Road Islamabad.
Ph: +92-51-4848375, Fax: +92-51-4848375
Email: newvisionec@yahoo.com
Regional Office: 287-A Street # 6, Cavalry Ground ,Lahore
Ph: +92-42-37250130

PROJECT:

"PROVISION OF MISSING FACILITIES FOR THE SHAIKH AYAZ UNIVERSITY SHIKARPUR"

TITLE:

EARTHING DETAIL

CLIENT:

SHAIKH AYAZ UNIVERSITY SHIKARPUR

DESIGNED BY:	APPROVED BY:	DATE :
ENG.SHADAB		MARCH, 2022
DRAWN BY:	JOB NO.	SCALE:
RIZWAN		N.T.S

DRG. NO. EL-03

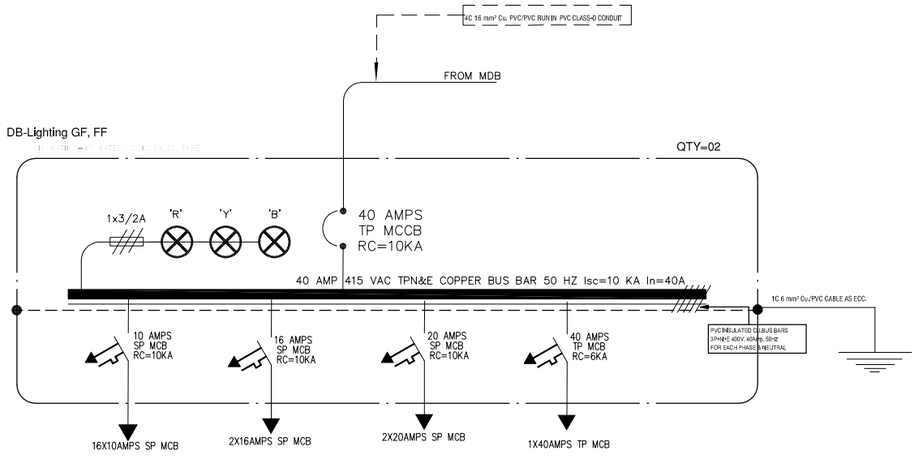

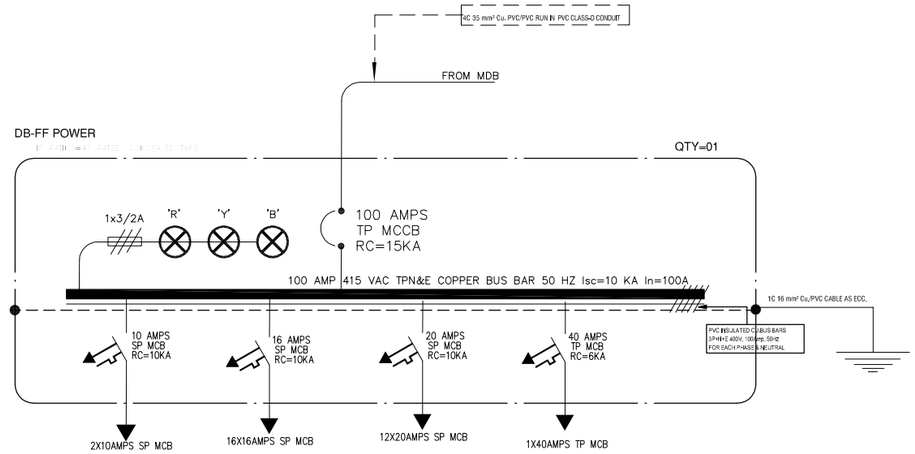

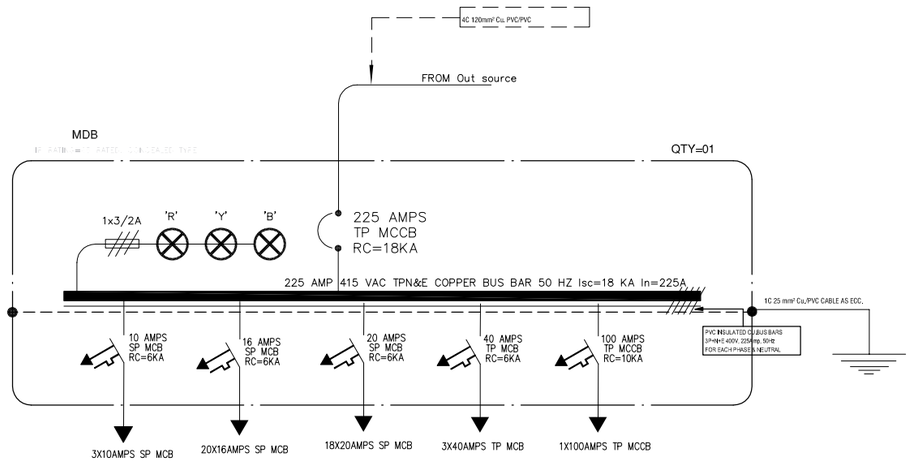

ADDITION & REVISION					
ADD./REV. NO.	DATE	DESCRIPTION	DES. BY	CHK. BY	APP. BY

DESIGNER:

NEW VISION ENGINEERING CONSULTANT
Head Office: Office No.B-6 SECOND FLOOR Masood Arcade
IJP Road Islamabad.
Ph: +92-51-4848375, Fax: +92-51-4848375
Email: newvisionec@yahoo.com
Regional Office: 287-A Street # 6, Cavalry Ground ,Lahore
Ph: +92-42-37250130

PROJECT:

"PROVISION OF MISSING FACILITIES FOR THE SHAIKH AYAZ UNIVERSITY SHIKARPUR"

TITLE:

DB PLANS

CLIENT:

SHAIKH AYAZ UNIVERSITY SHIKARPUR

DESIGNED BY: ENG.SHADAB	APPROVED BY:	DATE : MARCH, 2022
DRAWN BY: RIZWAN	JOB NO.	SCALE: N.T.S
DRG. NO. EL-04		

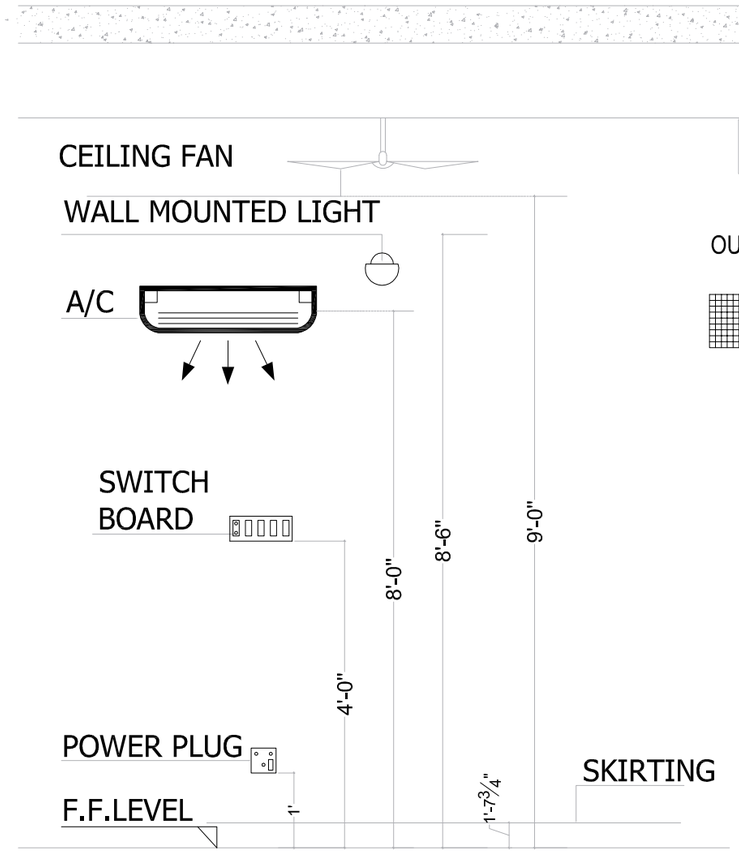

DETAIL–S1

MOUNTING HEIGHT OF FIXTURE DETAIL

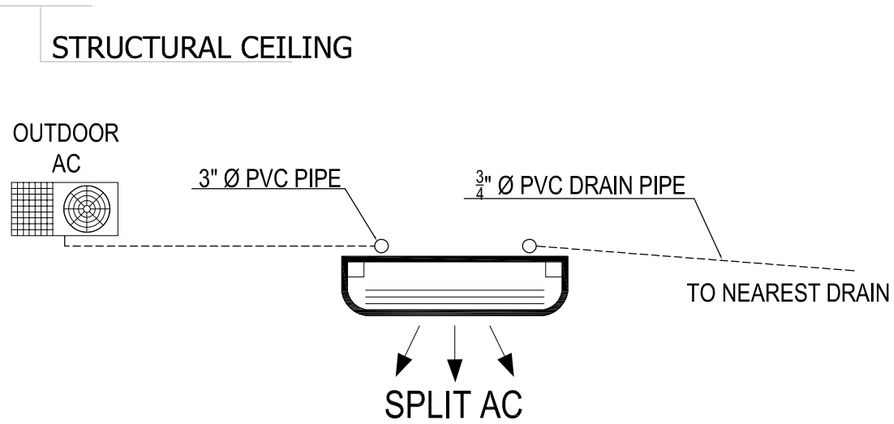

DETAIL–Z1

TYPICAL AC INDOOR AND OUTDOOR UNIT DETAILS

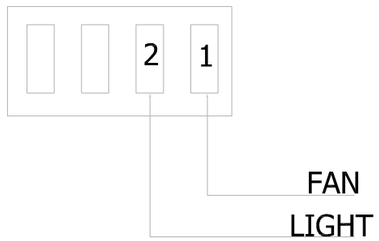

NOTE:

LOCATION OF ACs INDOOR, OUTDOOR UNIT AND ACs POWER SOCKETS IN APARTMENTS AREA ARE TENTATIVE SUBJECT TO FINAL FININSHING DETAIL DECIDED BY CLIENT, ARCHITECT IN CHARGE AND CONCERENED SITE ENGINEER

ADDITION & REVISION					
ADD./REV. NO.	DATE	DESCRIPTION	DES. BY	CHK. BY	APP. BY

DESIGNER:

NEW VISION ENGINEERING CONSULTANT
Head Office: Office No.B-6 SECOND FLOOR Masood Arcade IJP Road Islamabad.
Ph: +92-51-4848375, Fax: +92-51-4848375
Email: newvisionec@yahoo.com
Regional Office: 287-A Street # 6, Cavalry Ground ,Lahore
Ph: +92-42-37250130

PROJECT:
"PROVISION OF MISSING FACILITIES FOR THE SHAIKH AYAZ UNIVERSITY SHIKARPUR"

TITLE:
TYPICAL DETAIL-01

CLIENT:
SHAIKH AYAZ UNIVERSITY SHIKARPUR

DESIGNED BY: ENG.SHADAB	APPROVED BY:	DATE : MARCH, 2022
DRAWN BY: RIZWAN	JOB NO.	SCALE: N.T.S
DRG. NO. EL-05		

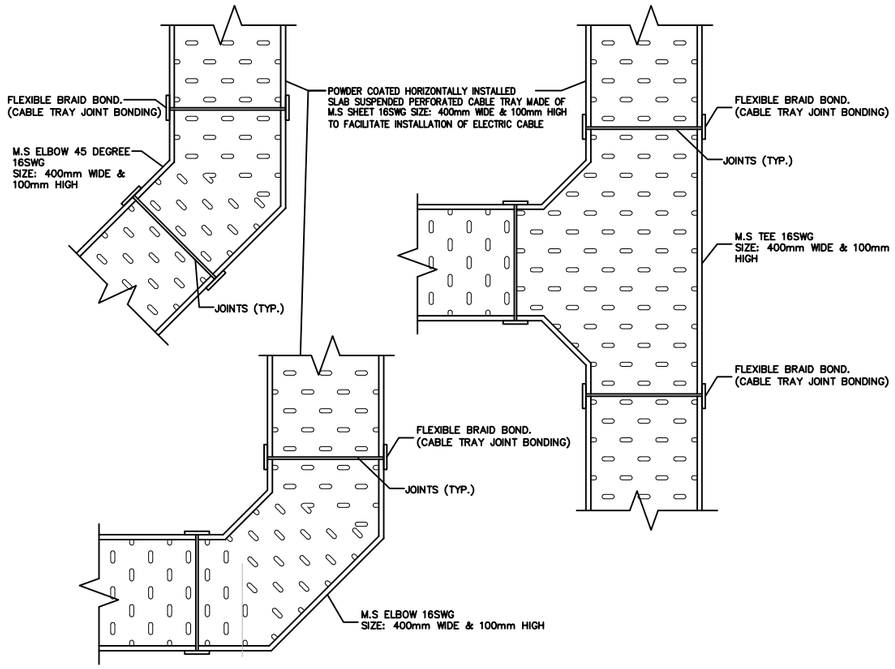

ELECTRICAL CABLE TRAY

DETAIL : A-2(a)

FIRE ALARM AND PUBLIC ADDRESS SYSTEM COMPONENT CONNECTION DETAIL.

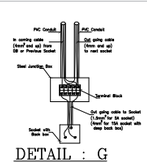

DETAIL : G

(INSTALL SOCKET WITH JUNCTION BOX)
N.T.S

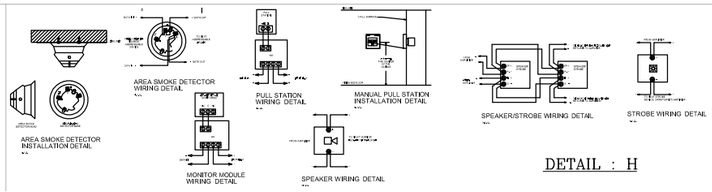

DETAIL : H

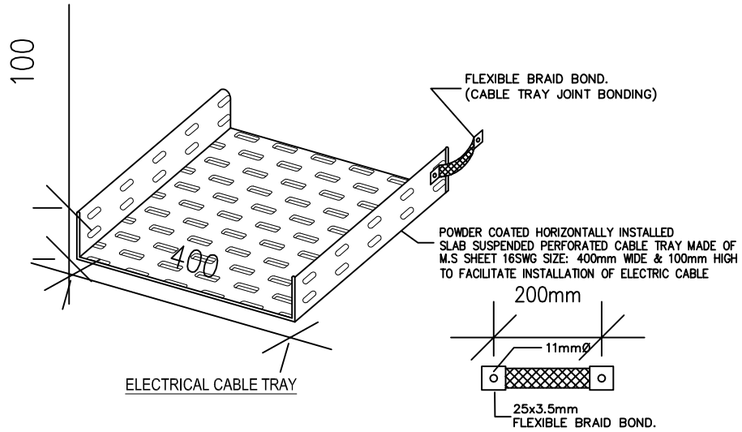

ELECTRICAL CABLE TRAY

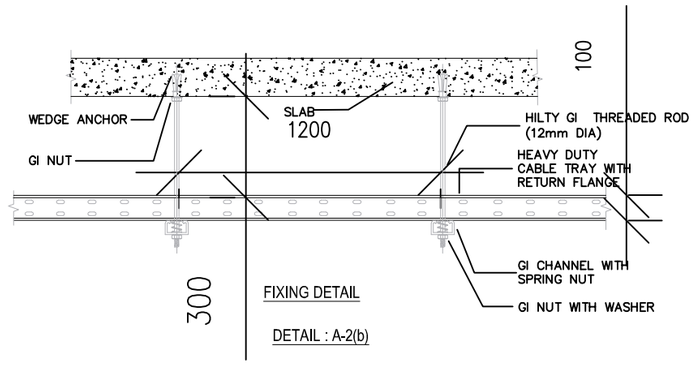

FIXING DETAIL

DETAIL : A-2(b)

GENERAL NOTES:

1. ALL DIMENSIONS ARE IN MM UNLESS OTHERWISE SPECIFIED
2. TRENCH WIDTH TO SUIT REQUIREMENTS.
3. ALL CABLE CROSSINGS WITH OTHER SERVICES TO BE CARRIED OUT IN CONSULTATION WITH SITE ENGINEER DURING CONSTRUCTION.
4. ALL ROAD CROSSING DUCTS TO HAVE 25% SPARE DUCTS.

ADDITION & REVISION					
ADD./REV. NO.	DATE	DESCRIPTION	DES. BY	CHK. BY	APP. BY

DESIGNER:

NEW VISION ENGINEERING CONSULTANT
Head Office: Office No.B-6 SECOND FLOOR Masood Arcade
IJP Road Islamabad.
Ph: +92-51-4848375, Fax: +92-51-4848375
Email: newvisionec@yahoo.com
Regional Office: 287-A Street # 6, Cavalry Ground ,Lahore
Ph: +92-42-37250130

PROJECT:
"PROVISION OF MISSING FACILITIES FOR THE SHAIKH AYAZ UNIVERSITY SHIKARPUR"

TITLE:
TYPICAL DETAIL-02

CLIENT:
SHAIKH AYAZ UNIVERSITY SHIKARPUR

DESIGNED BY: ENG.SHADAB	APPROVED BY:	DATE : MARCH, 2022
DRAWN BY: RIZWAN	JOB NO.	SCALE: N.T.S
DRG. NO. EL-06		

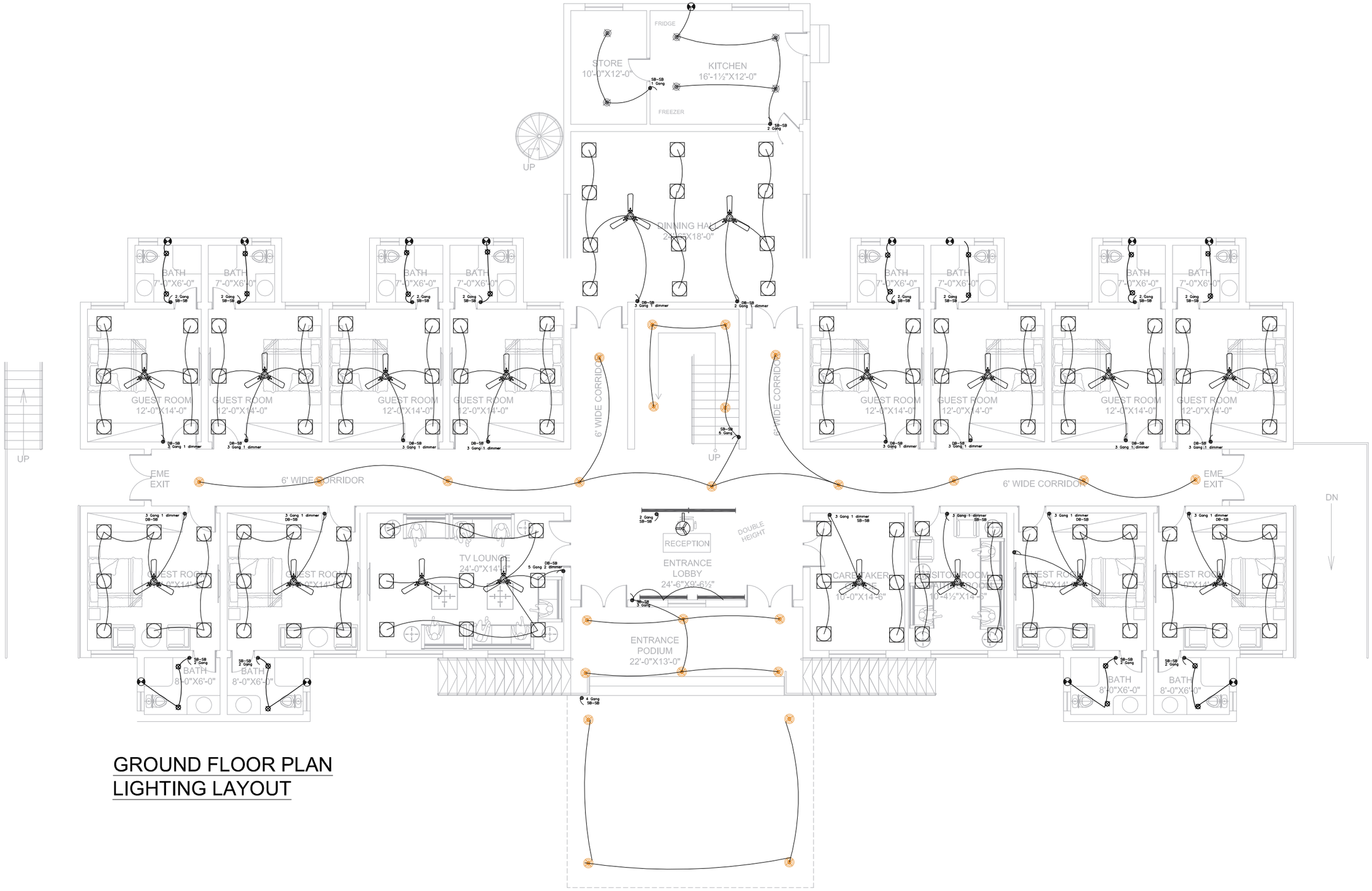

GROUND FLOOR PLAN
LIGHTING LAYOUT

ADDITION & REVISION					
01	7/10/21	REVISED PLAN			
ADD.REV.NO.	DATE	DESCRIPTION	DES. BY	CHK. BY	APP. BY

DESIGNER:

NEW VISION ENGINEERING CONSULTANT
Head Office: Office No.B-6 SECOND FLOOR Masood Arcade
IJP Road Islamabad.
Ph: +92-51-4848375, Fax: +92-51-4848375
Email: newvisionec@yahoo.com
Regional Office: 287-A Street # 6, Cavalry Ground ,Lahore
Ph: +92-42-37250130

PROJECT:
"PROVISION OF MISSING FACILITIES FOR THE SHAIKH AYAZ UNIVERSITY SHIKARPUR"

TITLE:
GROUND FLOOR PLAN
LIGHTING LAYOUT PLAN

CLIENT:
SHAIKH AYAZ UNIVERSITY SHIKARPUR

DESIGNED BY:	APPROVED BY:	DATE :
ENG.SHADAB		MARCH, 2022
SUFYAN	JOB NO.	SCALE: N.T.S

DRG. NO. EL-07

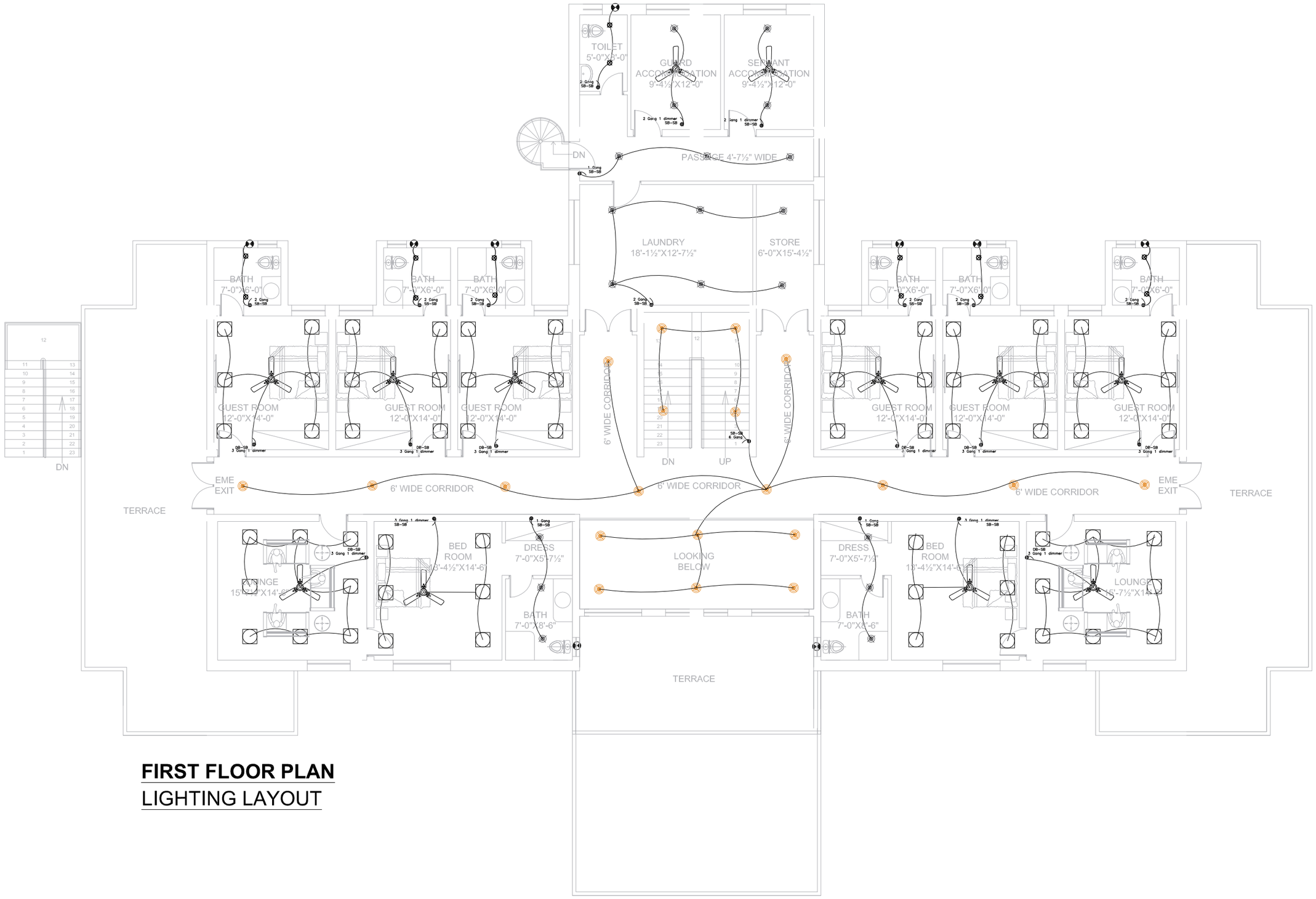

FIRST FLOOR PLAN
LIGHTING LAYOUT

ADDITION & REVISION					
ADD./REV. NO.	DATE	DESCRIPTION	DES. BY	CHK. BY	APP. BY

DESIGNER:

NEW VISION ENGINEERING CONSULTANT
Head Office: Office No.B-6 SECOND FLOOR Masood Arcade
IJP Road Islamabad.
Ph: +92-51-4848375, Fax: +92-51-4848375
Email: newvisionec@yahoo.com
Regional Office: 287-A Street # 6, Cavalry Ground ,Lahore
Ph: +92-42-37250130

PROJECT:
"PROVISION OF MISSING FACILITIES FOR THE SHAIKH AYAZ UNIVERSITY SHIKARPUR"

TITLE:
FIRST FLOOR PLAN
LIGHTING LAYOUT PLAN

CLIENT:
SHAIKH AYAZ UNIVERSITY SHIKARPUR

DESIGNED BY: ENG.SHADAB	APPROVED BY:	DATE : MARCH, 2022
DRAWN BY: RIZWAN	JOB NO.	SCALE: N.T.S
DRG. NO. EL-08		

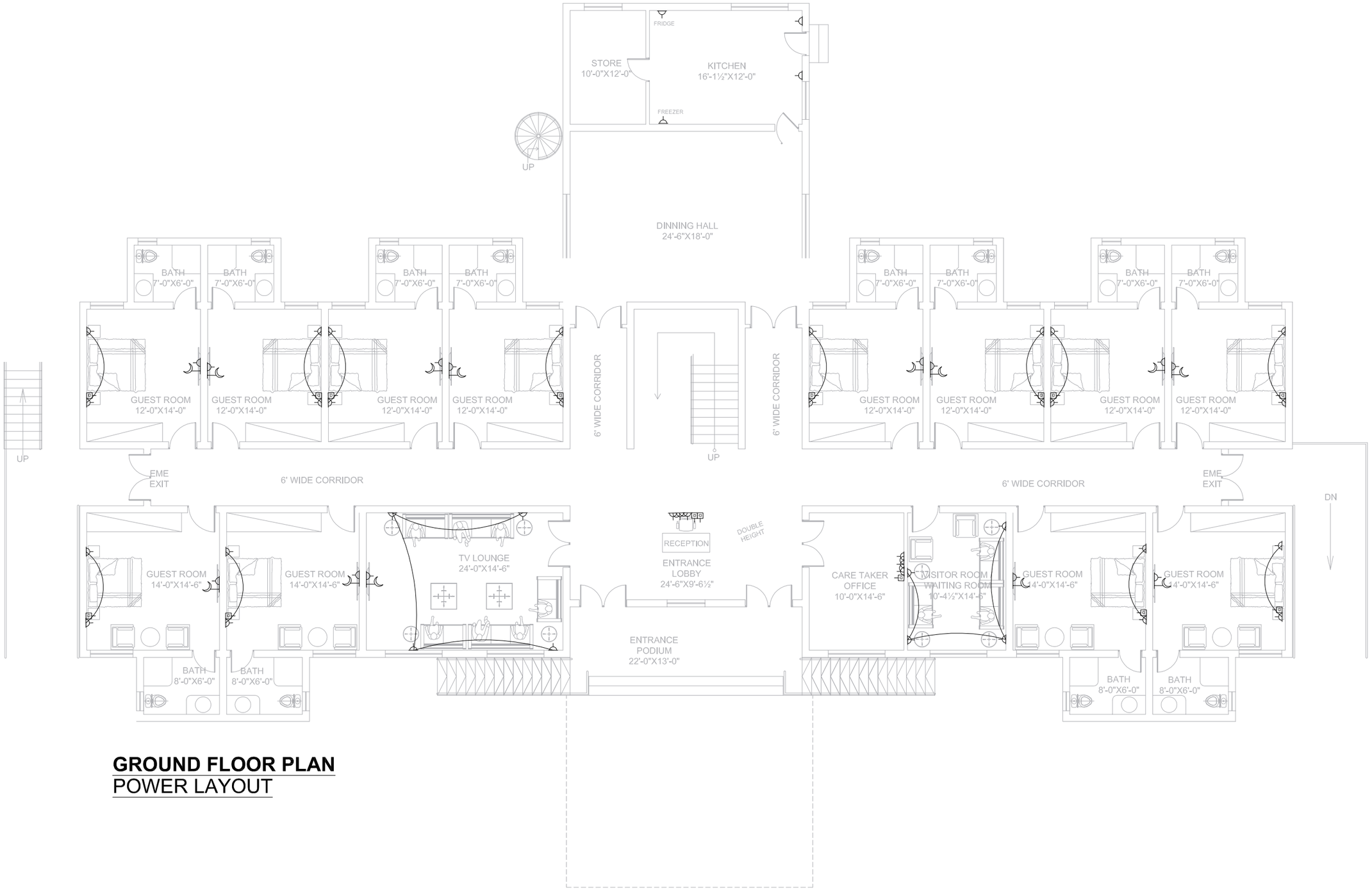

GROUND FLOOR PLAN
POWER LAYOUT

ADDITION & REVISION					
01	7/10/21	REVISED PLAN			
ADD./REV. NO.	DATE	DESCRIPTION	DES. BY	CHK. BY	APP. BY

DESIGNER:

NEW VISION ENGINEERING CONSULTANT
Head Office: Office No.B-6 SECOND FLOOR Masood Arcade IJP Road Islamabad.
Ph: +92-51-4848375, Fax: +92-51-4848375
Email: newvisionec@yahoo.com
Regional Office: 287-A Street # 6, Cavalry Ground ,Lahore
Ph: +92-42-37250130

PROJECT:
"PROVISION OF MISSING FACILITIES FOR THE SHAIKH AYAZ UNIVERSITY SHIKARPUR"

TITLE:
GROUND FLOOR PLAN
POWER LAYOUT

CLIENT:
SHAIKH AYAZ UNIVERSITY SHIKARPUR

DESIGNED BY: ENG.SHADAB	APPROVED BY:	DATE : MARCH, 2022
DRAWN BY: RIZWAN	JOB NO.	SCALE: N.T.S
DRG. NO. EL-09		

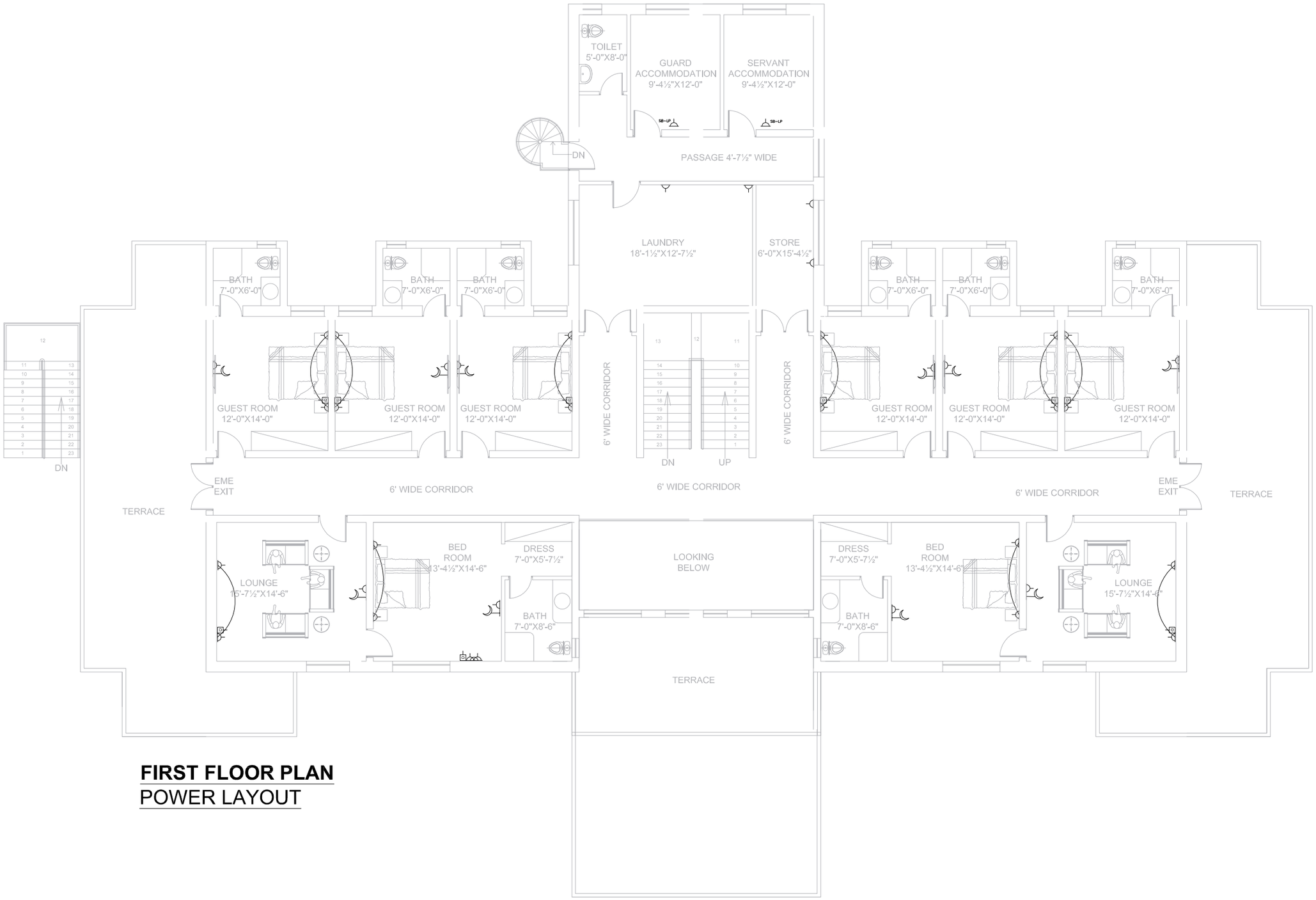

FIRST FLOOR PLAN
POWER LAYOUT

ADDITION & REVISION					
ADD./REV. NO.	DATE	DESCRIPTION	DES. BY	CHK. BY	APP. BY

DESIGNER:

NEW VISION ENGINEERING CONSULTANT
Head Office: Office No.B-6 SECOND FLOOR Masood Arcade
IJP Road Islamabad.
Ph: +92-51-4848375, Fax: +92-51-4848375
Email: newvisionec@yahoo.com
Regional Office: 287-A Street # 6, Cavalry Ground ,Lahore
Ph: +92-42-37250130

PROJECT:
"PROVISION OF MISSING FACILITIES FOR THE SHAIKH AYAZ UNIVERSITY SHIKARPUR"

TITLE:
FIRST FLOOR PLAN
POWER LAYOUT

CLIENT:
SHAIKH AYAZ UNIVERSITY SHIKARPUR

DESIGNED BY: ENG.SHADAB	APPROVED BY:	DATE : MARCH, 2022
DRAWN BY: RIZWAN	JOB NO.	SCALE: N.T.S
DRG. NO. EL-10		

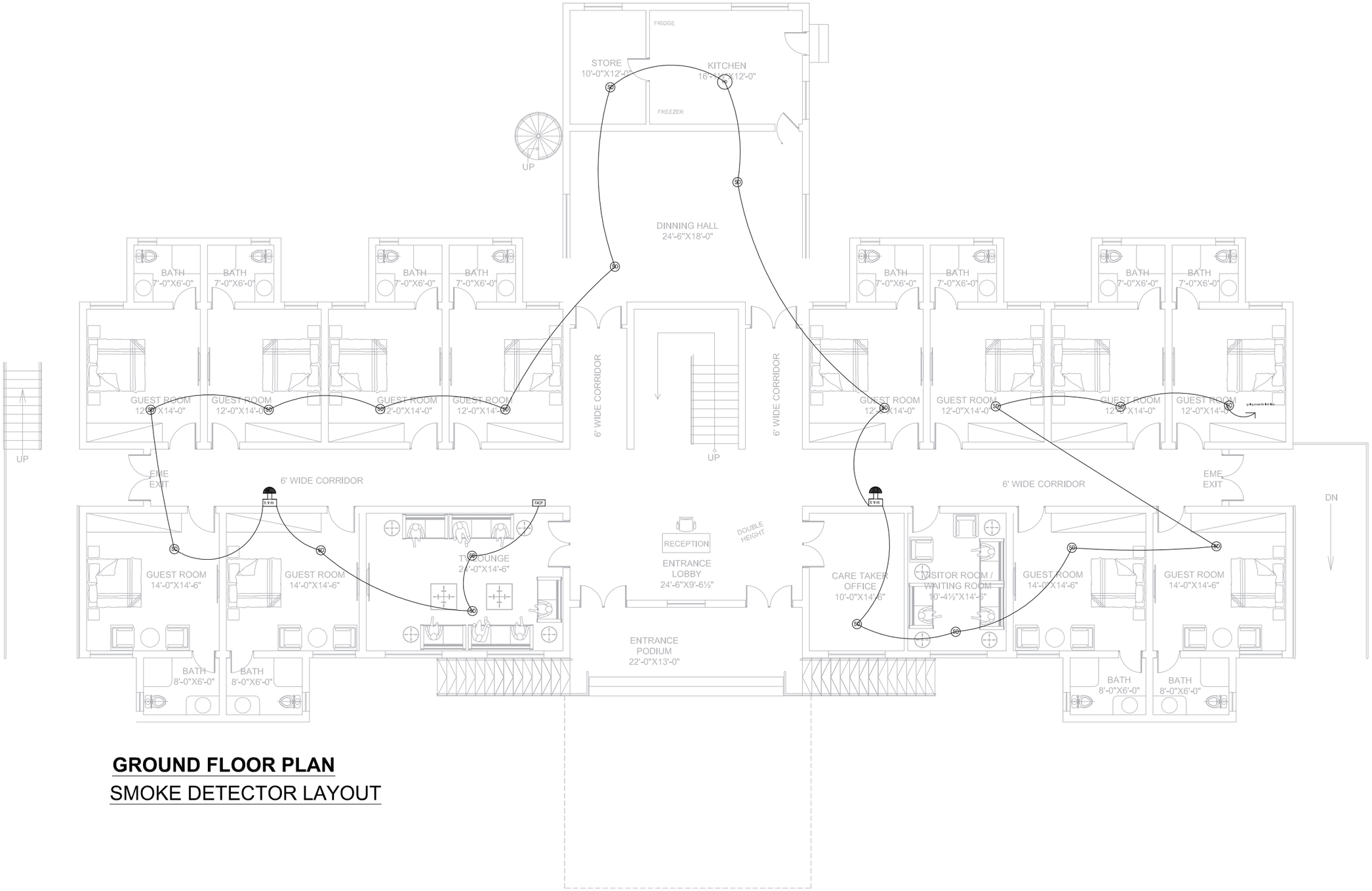

GROUND FLOOR PLAN

SMOKE DETECTOR LAYOUT

ADDITION & REVISION					
01	7/10/21	REVISED PLAN			
ADD./REV. NO.	DATE	DESCRIPTION	DES. BY	CHK. BY	APP. BY

DESIGNER:

NEW VISION ENGINEERING CONSULTANT
Head Office: Office No.B-6 SECOND FLOOR Masood Arcade
IJP Road Islamabad.
Ph: +92-51-4848375, Fax: +92-51-4848375
Email: newvisionec@yahoo.com
Regional Office: 287-A Street # 6, Cavalry Ground ,Lahore
Ph: +92-42-37250130

PROJECT:

"PROVISION OF MISSING FACILITIES FOR THE SHAIKH AYAZ UNIVERSITY SHIKARPUR"

TITLE:

GROUND FLOOR PLAN
SMOKE DETECTOR LAYOUT

CLIENT:

SHAIKH AYAZ UNIVERSITY SHIKARPUR

DESIGNED BY: ENG.SHADAB	APPROVED BY:	DATE : MARCH, 2022
DRAWN BY: RIZWAN	JOB NO.	SCALE: N.T.S
DRG. NO. EL-11		

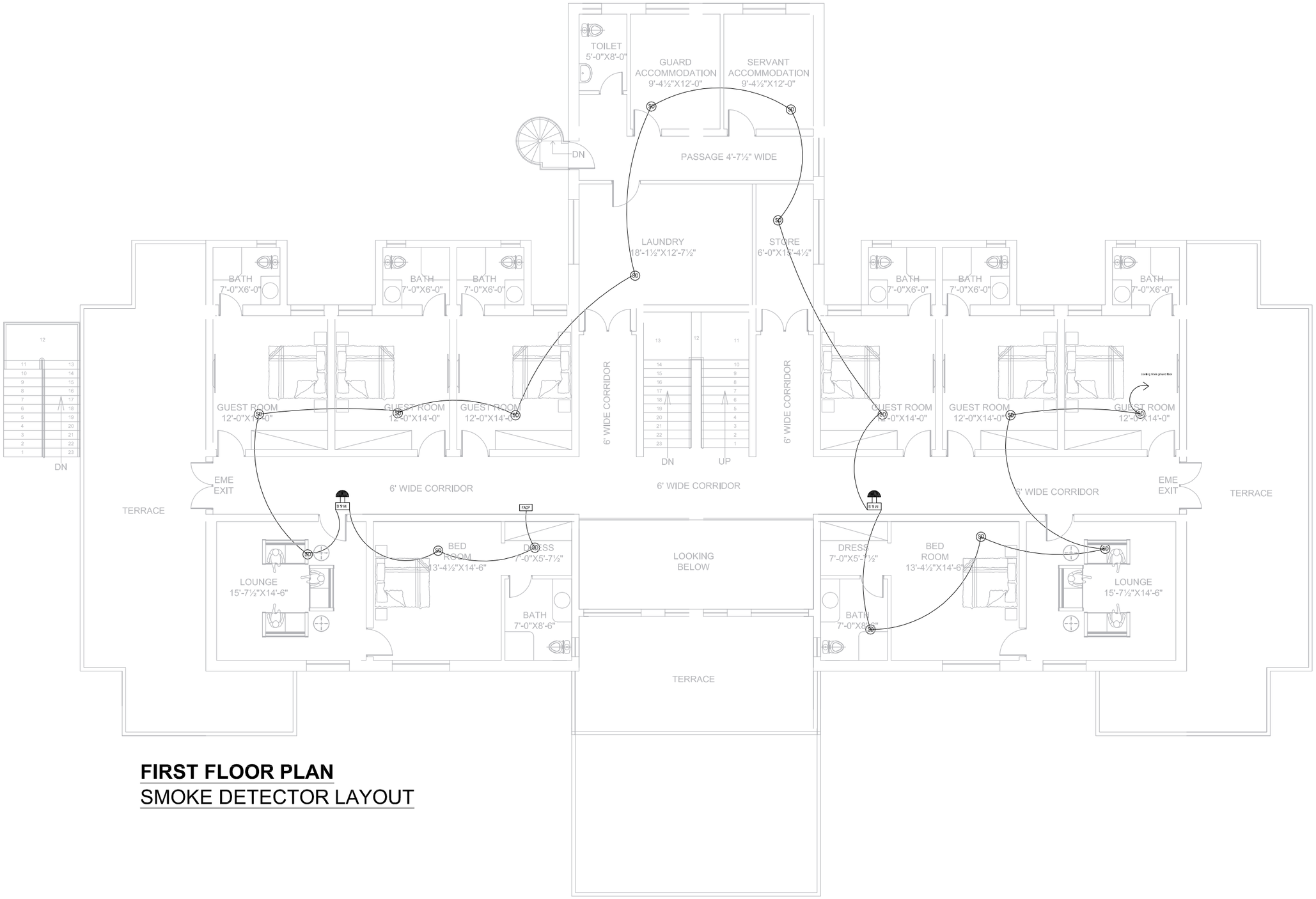

FIRST FLOOR PLAN
SMOKE DETECTOR LAYOUT

ADDITION & REVISION					
ADD./REV. NO.	DATE	DESCRIPTION	DES. BY	CHK. BY	APP. BY

DESIGNER:

NEW VISION ENGINEERING CONSULTANT
Head Office: Office No.B-6 SECOND FLOOR Masood Arcade
IJP Road Islamabad.
Ph: +92-51-4848375, Fax: +92-51-4848375
Email: newvisionec@yahoo.com
Regional Office: 287-A Street # 6, Cavalry Ground ,Lahore
Ph: +92-42-37250130

PROJECT:
"PROVISION OF MISSING FACILITIES FOR THE SHAIKH AYAZ UNIVERSITY SHIKARPUR"

TITLE:
FIRST FLOOR PLAN
SMOKE DETECTOR LAYOUT

CLIENT:
SHAIKH AYAZ UNIVERSITY SHIKARPUR

DESIGNED BY: ENG.SHADAB	APPROVED BY:	DATE : MARCH, 2022
DRAWN BY: RIZWAN	JOB NO.	SCALE: N.T.S
DRG. NO. EL-12		

PLUMBING

LIST OF DRAWINGS

S.NO.	DRAWING TITLE	DRG. NO
	PLUMBING DRAWINGS	
1	LIST OF DRAWING	PL-00
2	GENERAL NOTES	PL-01
3	GROUND FLOOR PLAN (SANITARY DRAINAGE LAYOUT)	PL-02
4	FIRST FLOOR PLAN (SANITARY DRAINAGE LAYOUT)	PL-03
5	ROOF FLOOR PLAN (STORM WATER DRAINAGE LAYOUT)	PL-04
6	GROUND FLOOR PLAN (WATER SUPPLY LAYOUT)	PL-05
7	FIRST FLOOR PLAN (WATER SUPPLY LAYOUT)	PL-06
8	ROOF PLAN (WATER SUPPLY LAYOUT)	PL-07
9	GROUND FLOOR PLAN (GAS SUPPLY LAYOUT)	PL-08
10	TYPICAL DETAILS	PL-09
11	TYPICAL DETAILS	PL-10

ADDITION & REVISION

ADD./REV. NO.	DATE	DESCRIPTION	DES. BY	CHK. BY	APP. BY

DESIGNER:

NEW VISION ENGINEERING CONSULTANT
Head Office: Office No.B-6 SECOND FLOOR Masood Arcade
IJP Road Islamabad.
Ph: +92-51-4848375, Fax: +92-51-4848375
Email: newvisionec@yahoo.com
Regional Office: 287-A Street # 6, Cavalry Ground ,Lahore
Ph: +92-42-37250130

PROJECT:
"PROVISION OF MISSING FACILITIES FOR THE SHAIKH AYAZ UNIVERSITY SHIKARPUR"

TITLE:
LIST OF DRAWINGS

CLIENT:
SHAIKH AYAZ UNIVERSITY SHIKARPUR

DESIGNED BY: MF	APPROVED BY:	DATE : MARCH, 2022
DRAWN BY: RIZWAN	JOB NO.	SCALE: N.T.S
DRG. NO. PL-00		

GENERAL NOTES.

1 – PIPE PASSING THROUGH WALL, FLOOR OR ROOF SHALL BE PROTECTED WITH SLEEVES

2 – PIPE SIZES & DIMENSIONS ARE IN INCHES, UNLESS OTHERWISE MENTIONED

3 – PLUMBING SERVICES, SHALL BE CO–ORDINATED WITH OTHER SERVICES SUCH AS ELECTRICAL, ETC. TO AVOID CONFLIT OR INTERFERENCE WITH THEM.

4 – SIZE OF FLOOR DRAIN UNLESS OTHERWISE STATED SHALL BE SAME AS THE SIZE OF OUTLET DRAIN PIPE.

5 – WHEREVER FLOOR DRAIN/TRAP IS SHOWN, SLOPE FLOOR TOWARDS DRAIN/TRAP.

6 – HORIZONTAL DRAINAGE PIPING OF 3 INCH DIAMETER & LESS SHALL BE INSTALLED WITH A SLOPE OF NOT LESS THEN 1/4 INCH PER FOOT, LARGER ONES WITH A SLOPE OF NOT LESS THAN 1/8 INCH PER FOOT.

7 – EXTENSION OF VENT PIPES THROUGH A ROOF SHALL BE TERMINATED AT LEAST 6 INCHES ABOVE FINISHED ROOF LEVEL. EACH VENT TERMINAL SHALL BE MADE WATER TIGHT WITH THE ROOF BY PROPER FLASHING

8 – SIZE OF ANYTHING GIVEN ON PLUMBING DRAWING MEANS ITS CLEAR DIMENSIONS (CAPACITY), UNLESS OTHERWISE MENTIONED.

9 – THE "VERTICAL DISTANCE" FROM FIXTURE OUTLET TO THE TRAP WEIR SHALL PREFERABLY BE NOT MORE THAN 12 INCHES. HOWEVER, THIS "VERTICAL DISTANCE" FROM THE FIXTURE OUTLET TO THE TRAP WEIR SHALL NOT EXCEED 24 INCHES.

10 – WHERE THE CHANGE OF DIRECTION IS 45° OR LESS, IT IS NOT NECESSARY TO PROVIDE A CLEAN OUT. BUT WHEN THE CHANGE IN DIRECTION IS MORE THAN 45°, A CLEAN OUT SHOULD BE REQUIRED.

11 – ALL TRAPS AND FLOOR DRAINS SHALL HAVE A WATER SEAL NOT LESS THAN 2 INCHES.

12 – (EXTERNAL SERVICES) THE BOTTOM OF WATER–SERVICES PIPE , AT ALL POINTS,SHALL BE AT LEAST 12 INCHES ABOVE THE TOP OF THE SEWER LINE AT ITS HIGHEST POINT.

13 – NO "T" FITTING IS ALLOWED IN SANITARY DRAINAGE LAYOUT. USE ONLY "Y" FITTINGS.

TABLE-1

ABBREV.	DESCRIPTION
SP	SOIL PIPE
WP	WASTE PIPE
SS	SOIL STACK
WS	WASTE STACK
VP	VENT PIPE
VS	VENT STACK
T/A	TO ABOVE
F/A	FROM ABOVE
T/B	TO BELOW
F/B	FROM BELOW

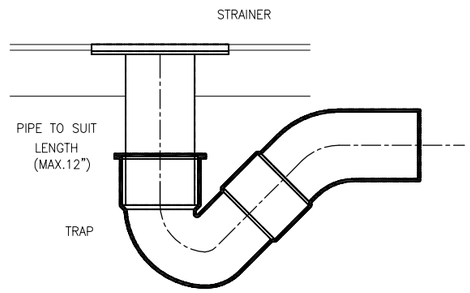

DETAIL OF FLOOR TRAP
NO SCALE

TABLE-2

ABBREV.	DESCRIPTION
GV	GATE VALVE
WP	WASTE PIPE
SP	SOIL PIPE
HS	HAND SHOWER
G.T	GULLY TRAP
Gr.T	GREASE INTERCEPTOR
MFT	MULTI FLOOR TRAP
FT	FLOOR TRAP
O.H.W.T	OVERHEAD WATER TANK
U.G.W.T	UNDERGROUND WATER TANK
WC	WATER CLOSD
SH	SHOWER
T/A	TO ABOVE
F/A	FROM ABOVE
T/B	TO BELOW
F/B	FROM BELOW

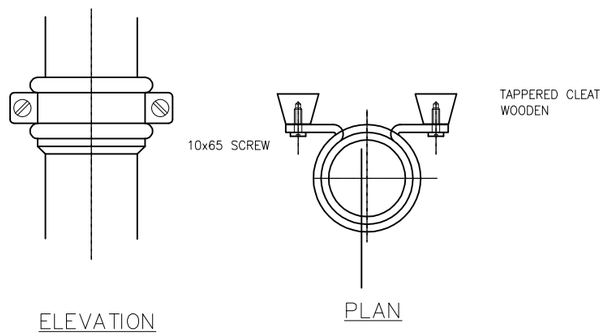

DETAIL OF PIPE CLAMP
NO SCALE (DIMENSIONS ARE IN mm.)

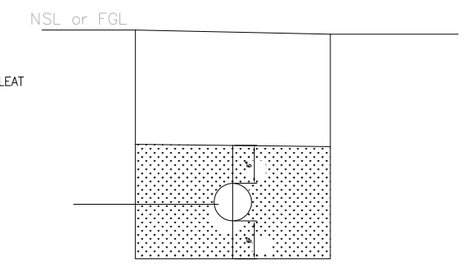

PIPE TRENCH DETAIL
NO SCALE

ADDITION & REVISION					
ADD./REV. NO.	DATE	DESCRIPTION	DES. BY	CHK. BY	APP. BY

DESIGNER:

NEW VISION ENGINEERING CONSULTANT
Head Office: Office No.B-6 SECOND FLOOR Masood Arcade IJP Road Islamabad.
Ph: +92-51-4848375, Fax: +92-51-4848375
Email: newvisionec@yahoo.com
Regional Office: 287-A Street # 6, Cavalry Ground ,Lahore
Ph: +92-42-37250130

PROJECT: **"PROVISION OF MISSING FACILITIES FOR THE SHAIKH AYAZ UNIVERSITY SHIKARPUR"**

TITLE: **GENERAL NOTES**

CLIENT: **SHAIKH AYAZ UNIVERSITY SHIKARPUR**

DESIGNED BY: MF	APPROVED BY:	DATE : MARCH, 2022
DRAWN BY:	JOB NO.	SCALE: N.T.S
DRG. NO. PL-01		

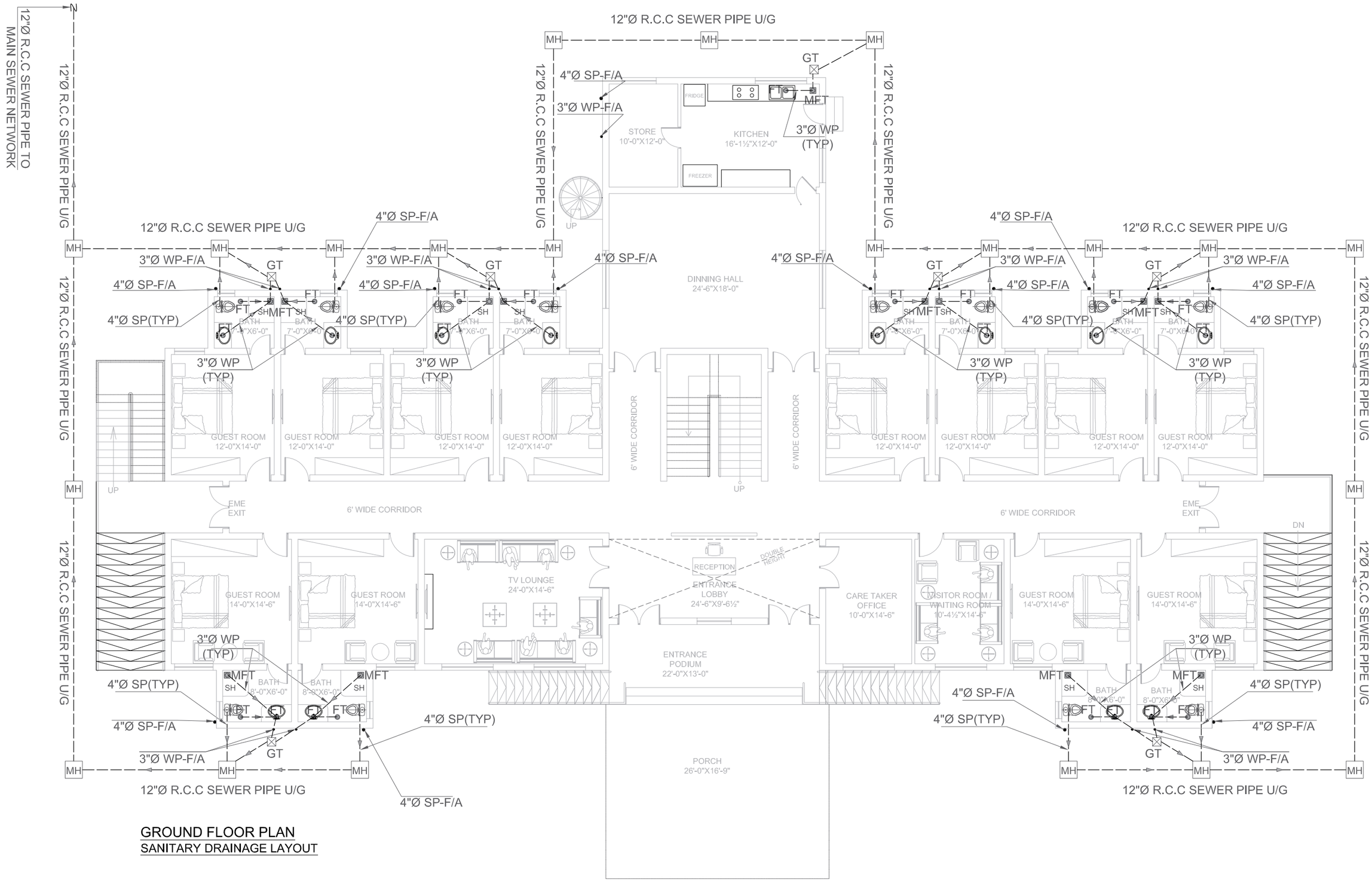

GROUND FLOOR PLAN
SANITARY DRAINAGE LAYOUT

ADDITION & REVISION					
ADD./REV. NO.	DATE	DESCRIPTION	DES. BY	CHK. BY	APP. BY

DESIGNER:

NEW VISION ENGINEERING CONSULTANT
Head Office: Office No.B-6 SECOND FLOOR Masood Arcade
IJP Road Islamabad.
Ph: +92-51-4848375, Fax: +92-51-4848375
Email: newvisionec@yahoo.com
Regional Office: 287-A Street # 6, Cavalry Ground ,Lahore
Ph: +92-42-37250130

PROJECT:
"PROVISION OF MISSING FACILITIES FOR THE SHAIKH AYAZ UNIVERSITY SHIKARPUR"

TITLE:
GROUND FLOOR PLAN
SANITARY DRAINAGE LAYOUT

CLIENT:
SHAIKH AYAZ UNIVERSITY SHIKARPUR

DESIGNED BY: MF	APPROVED BY:	DATE : MARCH, 2022
DRAWN BY:	JOB NO.	SCALE: N.T.S
DRG. NO. PL-02		

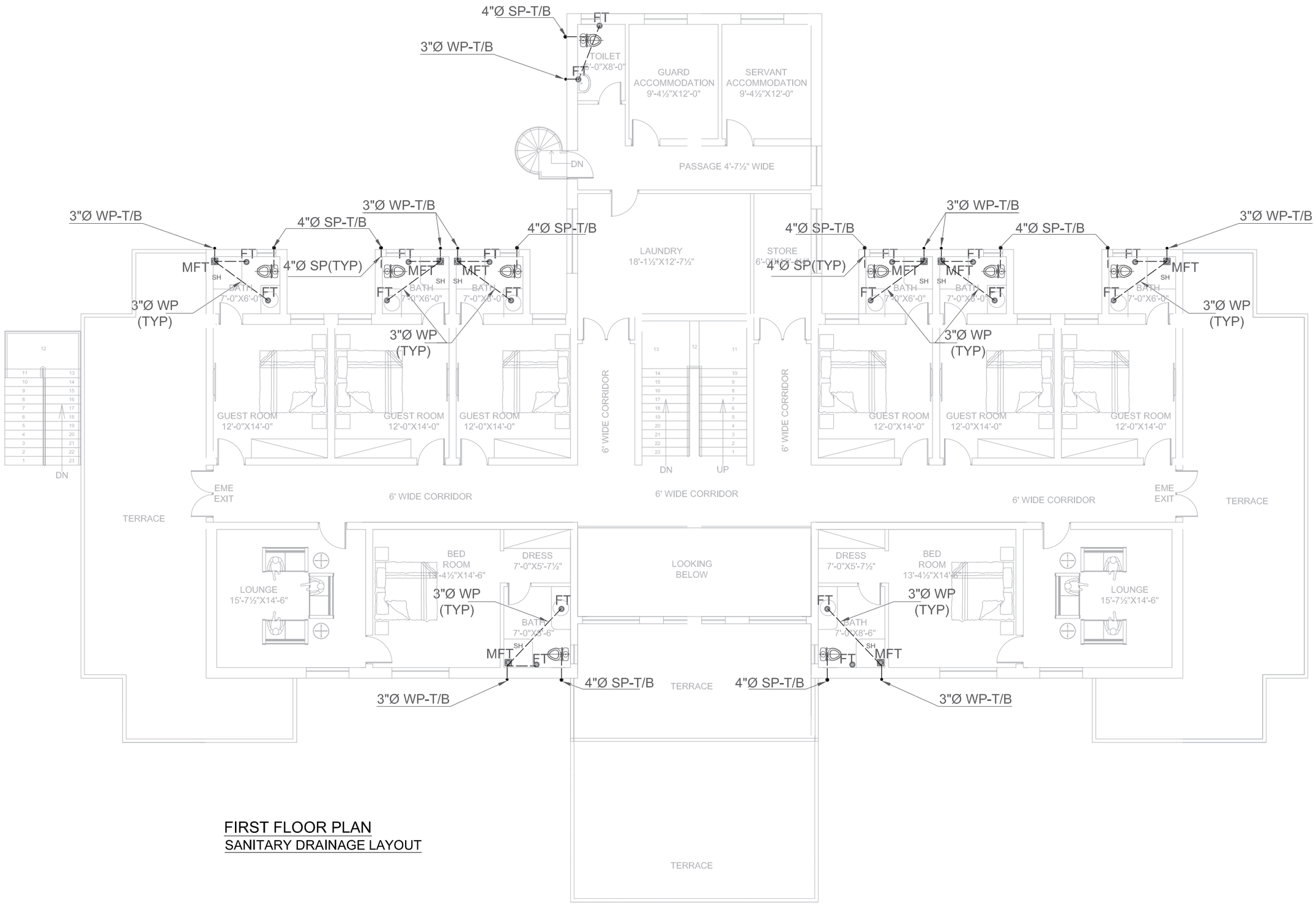

FIRST FLOOR PLAN
SANITARY DRAINAGE LAYOUT

ADDITION & REVISION					
ADD./REV. NO.	DATE	DESCRIPTION	DES. BY	CHK. BY	APP. BY

DESIGNER:

NEW VISION ENGINEERING CONSULTANT
Head Office: Office No.B-6 SECOND FLOOR Masood Arcade
IJP Road Islamabad.
Ph: +92-51-4848375, Fax: +92-51-4848375
Email: newvisionec@yahoo.com
Regional Office: 287-A Street # 6, Cavalry Ground ,Lahore
Ph: +92-42-37250130

PROJECT:
"PROVISION OF MISSING FACILITIES FOR THE SHAIKH AYAZ UNIVERSITY SHIKARPUR"

TITLE:
FIRST FLOOR PLAN
SANITARY DRAINAGE LAYOUT

CLIENT:
SHAIKH AYAZ UNIVERSITY SHIKARPUR

DESIGNED BY: MF	APPROVED BY:	DATE : MARCH, 2022
DRAWN BY:	JOB NO.	SCALE: N.T.S
DRG. NO. PL-03		

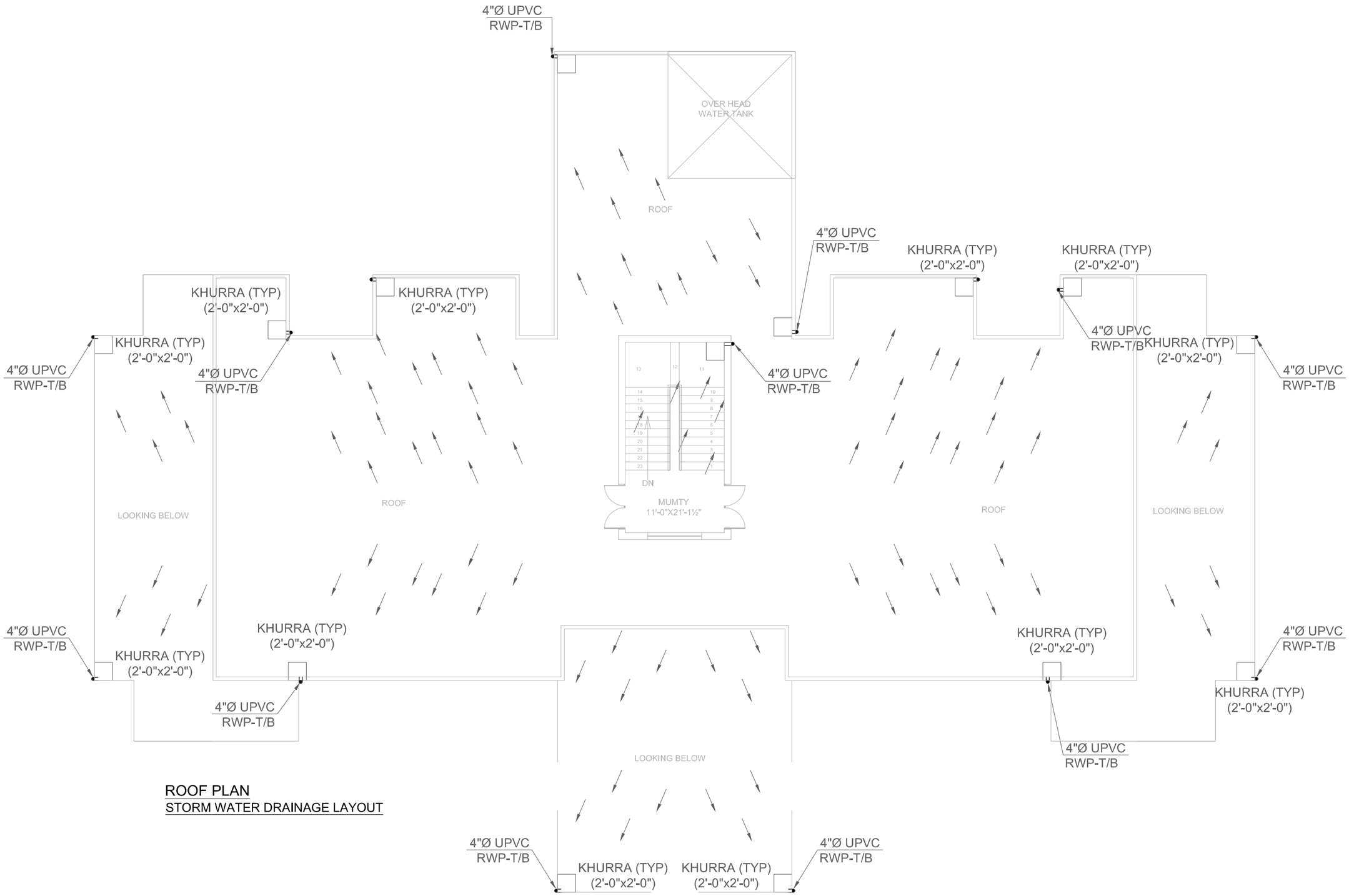

ROOF PLAN
STORM WATER DRAINAGE LAYOUT

ADDITION & REVISION					
ADD./REV. NO.	DATE	DESCRIPTION	DES. BY	CHK. BY	APP. BY

DESIGNER:

NEW VISION ENGINEERING CONSULTANT
Head Office: Office No.B-6 SECOND FLOOR Masood Arcade
IJP Road Islamabad.
Ph: +92-51-4848375, Fax: +92-51-4848375
Email: newvisionec@yahoo.com
Regional Office: 287-A Street # 6, Cavalry Ground ,Lahore
Ph: +92-42-37250130

PROJECT:
"PROVISION OF MISSING FACILITIES FOR THE SHAIKH AYAZ UNIVERSITY SHIKARPUR"

TITLE:
ROOF PLAN
STORM WATER DRAINAGE LAYOUT

CLIENT:
SHAIKH AYAZ UNIVERSITY SHIKARPUR

DESIGNED BY: MF	APPROVED BY:	DATE : MARCH, 2022
DRAWN BY:	JOB NO.	SCALE: N.T.S
DRG. NO. PL-04		

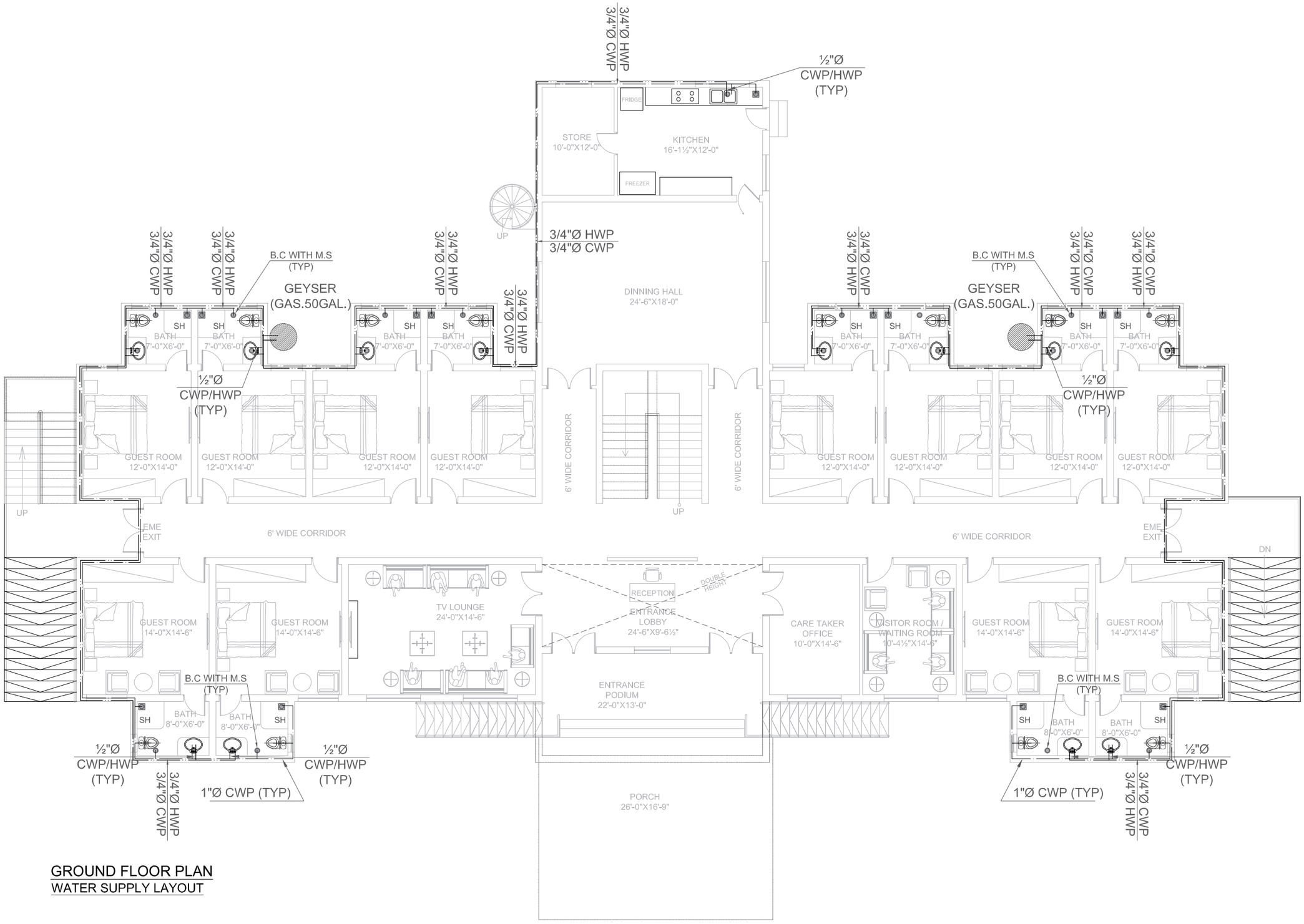

GROUND FLOOR PLAN
WATER SUPPLY LAYOUT

ADDITION & REVISION					
ADD./REV. NO.	DATE	DESCRIPTION	DES. BY	CHK. BY	APP. BY

DESIGNER:

NEW VISION ENGINEERING CONSULTANT
Head Office: Office No.B-6 SECOND FLOOR Masood Arcade
IJP Road Islamabad.
Ph: +92-51-4848375, Fax: +92-51-4848375
Email: newvisionec@yahoo.com
Regional Office: 287-A Street # 6, Cavalry Ground ,Lahore
Ph: +92-42-37250130

PROJECT:
"PROVISION OF MISSING FACILITIES FOR THE SHAIKH AYAZ UNIVERSITY SHIKARPUR"

TITLE:
GROUND FLOOR PLAN
WATER SUPPLY LAYOUT

CLIENT:
SHAIKH AYAZ UNIVERSITY SHIKARPUR

DESIGNED BY: MF	APPROVED BY:	DATE : MARCH, 2022
DRAWN BY:	JOB NO.	SCALE: N.T.S
DRG. NO. PL-05		

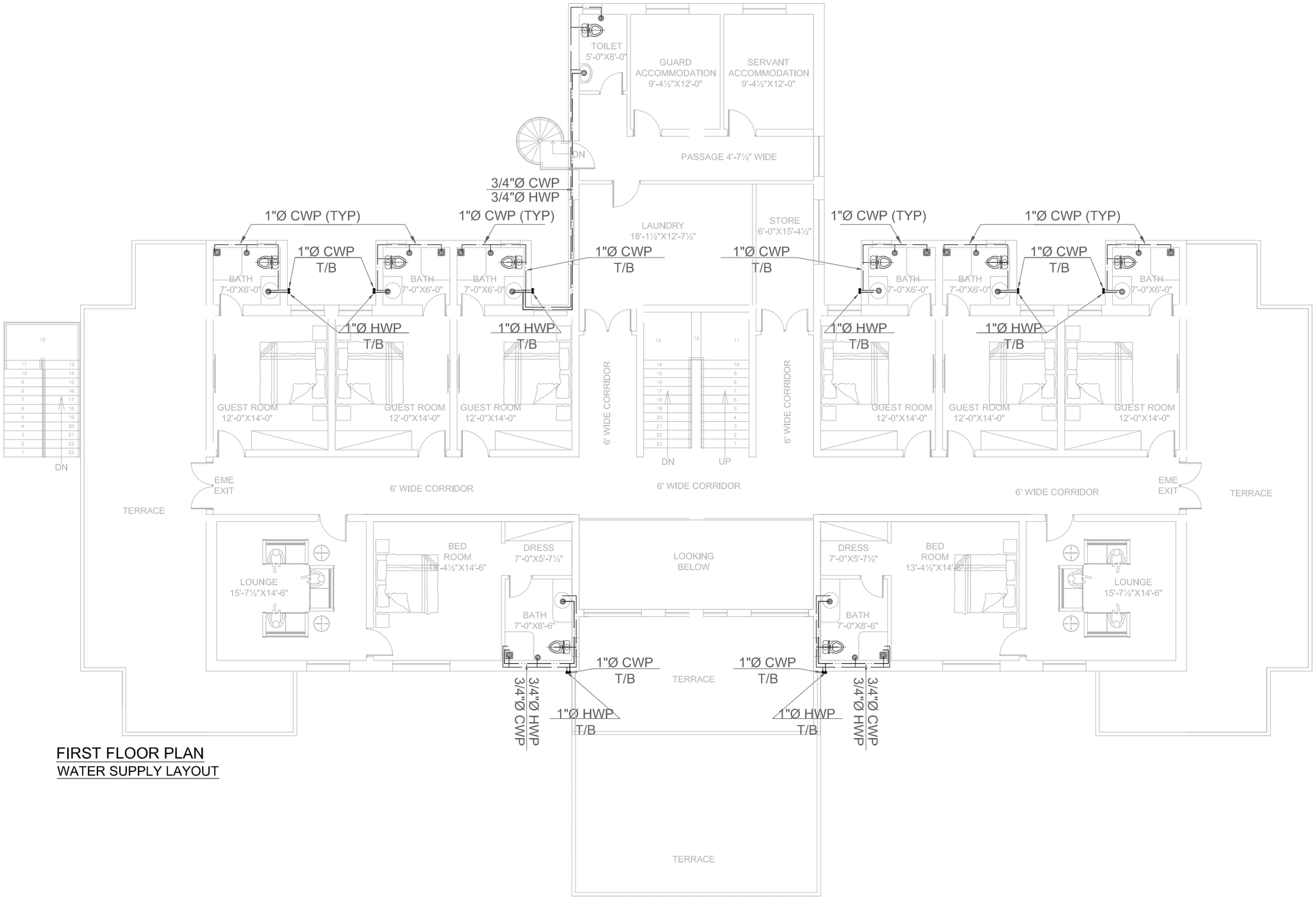

FIRST FLOOR PLAN
WATER SUPPLY LAYOUT

ADDITION & REVISION					
ADD./REV. NO.	DATE	DESCRIPTION	DES. BY	CHK. BY	APP. BY

DESIGNER:

NEW VISION ENGINEERING CONSULTANT

Head Office: Office No.B-6 SECOND FLOOR Masood Arcade
IJP Road Islamabad.
Ph: +92-51-4848375, Fax: +92-51-4848375
Email: newvisionec@yahoo.com
Regional Office: 287-A Street # 6, Cavalry Ground ,Lahore
Ph: +92-42-37250130

PROJECT:
"PROVISION OF MISSING FACILITIES FOR THE SHAIKH AYAZ UNIVERSITY SHIKARPUR"

TITLE:
FIRST FLOOR PLAN
WATER SUPPLY LAYOUT

CLIENT:
SHAIKH AYAZ UNIVERSITY SHIKARPUR

DESIGNED BY: MF	APPROVED BY:	DATE : MARCH, 2022
DRAWN BY:	JOB NO.	SCALE: N.T.S
DRG. NO. PL-06		

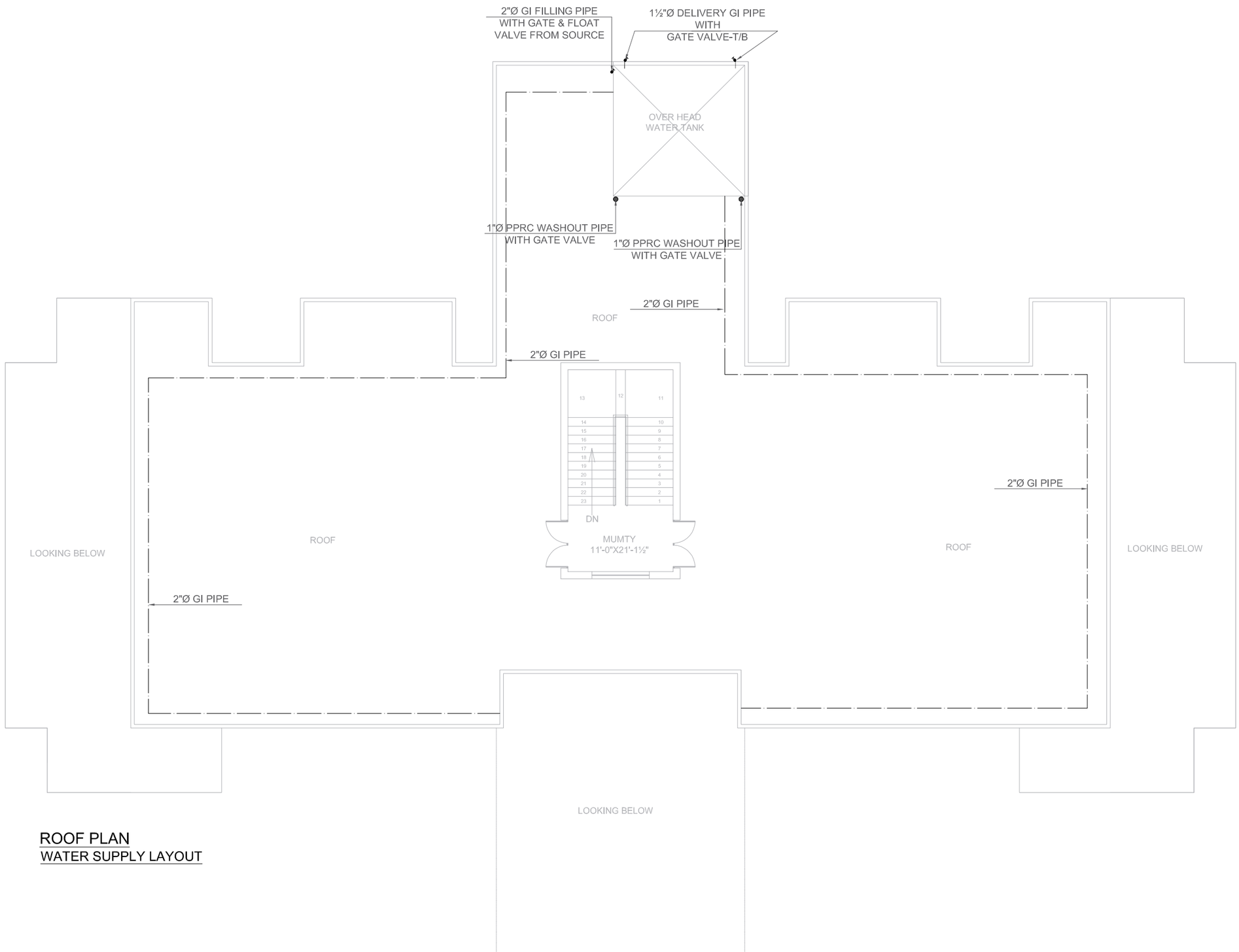

ROOF PLAN
WATER SUPPLY LAYOUT

ADDITION & REVISION					
ADD./REV. NO.	DATE	DESCRIPTION	DES. BY	CHK. BY	APP. BY

DESIGNER:

NEW VISION ENGINEERING CONSULTANT
Head Office: Office No.B-6 SECOND FLOOR Masood Arcade
IJP Road Islamabad.
Ph: +92-51-4848375, Fax: +92-51-4848375
Email: newvisionec@yahoo.com
Regional Office: 287-A Street # 6, Cavalry Ground ,Lahore
Ph: +92-42-37250130

PROJECT:
"PROVISION OF MISSING FACILITIES FOR THE SHAIKH AYAZ UNIVERSITY SHIKARPUR"

TITLE:
ROOF PLAN
WATER SUPPLY LAYOUT

CLIENT:
SHAIKH AYAZ UNIVERSITY SHIKARPUR

DESIGNED BY:	APPROVED BY:	DATE :
MF		MARCH, 2022
DRAWN BY:	JOB NO.	SCALE:
		N.T.S
DRG. NO.	PL-07	

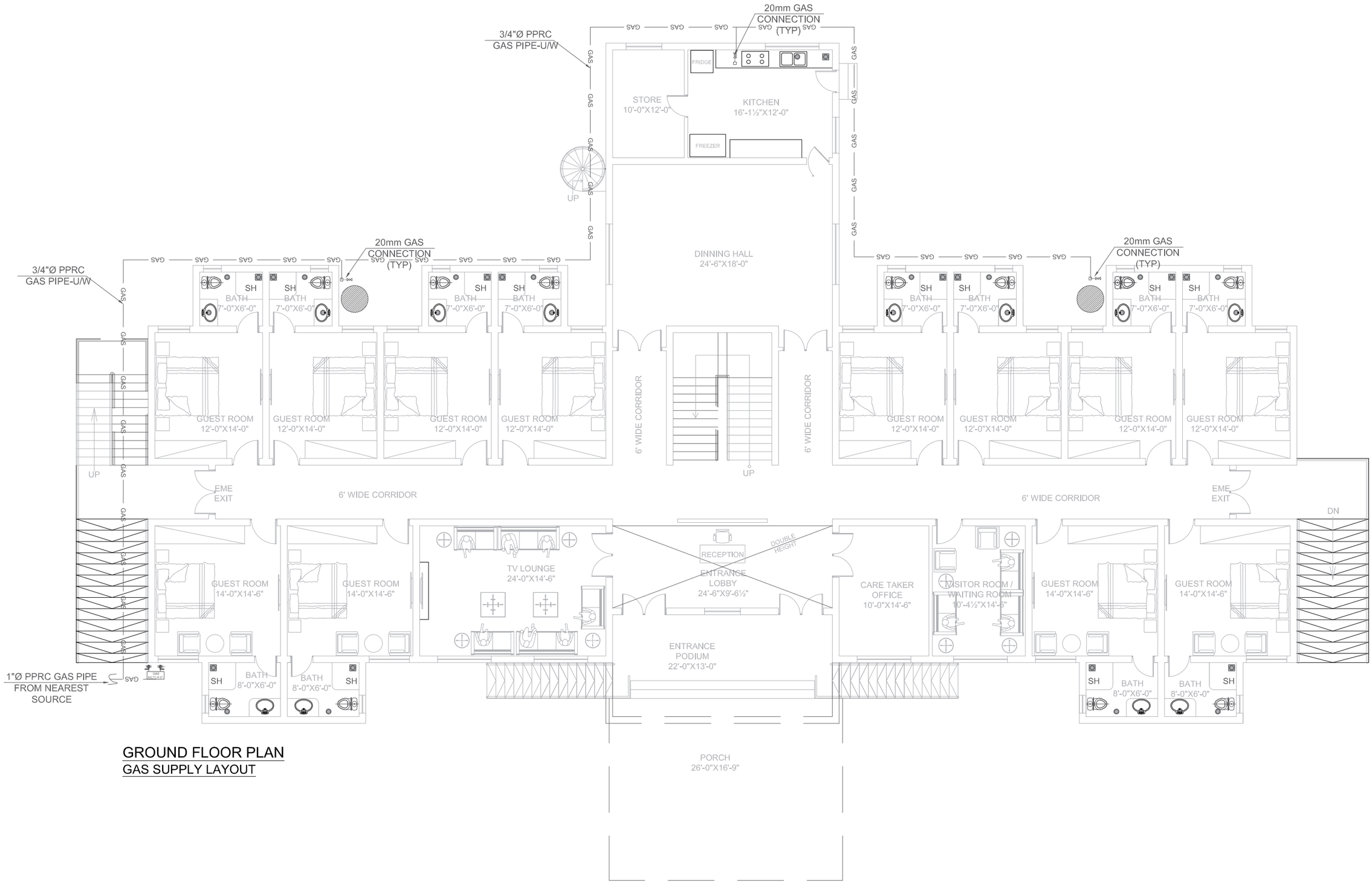

GROUND FLOOR PLAN
GAS SUPPLY LAYOUT

ADDITION & REVISION					
ADD./REV. NO.	DATE	DESCRIPTION	DES. BY	CHK. BY	APP. BY

DESIGNER:

NEW VISION ENGINEERING CONSULTANT
Head Office: Office No.B-6 SECOND FLOOR Masood Arcade
IJP Road Islamabad.
Ph: +92-51-4848375, Fax: +92-51-4848375
Email: newvisionec@yahoo.com
Regional Office: 287-A Street # 6, Cavalry Ground ,Lahore
Ph: +92-42-37250130

PROJECT:
"PROVISION OF MISSING FACILITIES FOR THE SHAIKH AYAZ UNIVERSITY SHIKARPUR"

TITLE:
GROUND FLOOR PLAN
GAS SUPPLY LAYOUT

CLIENT:
SHAIKH AYAZ UNIVERSITY SHIKARPUR

DESIGNED BY:	APPROVED BY:	DATE :
MF		MARCH, 2022
DRAWN BY:	JOB NO.	SCALE:
		N.T.S
DRG. NO.	PL-08	

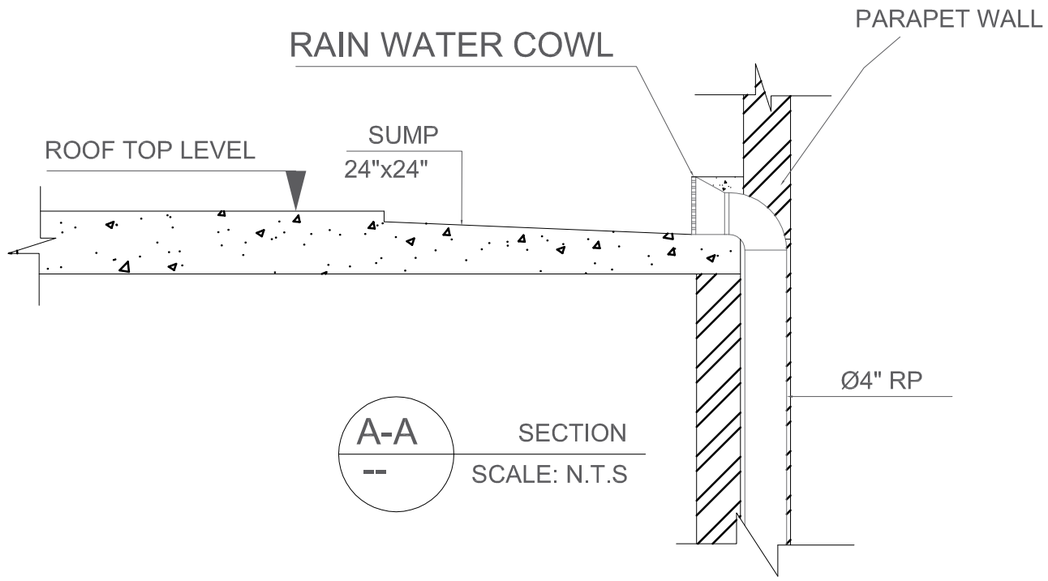

7 DETAIL OF ROOF TOP DRAIN
NO SCALE

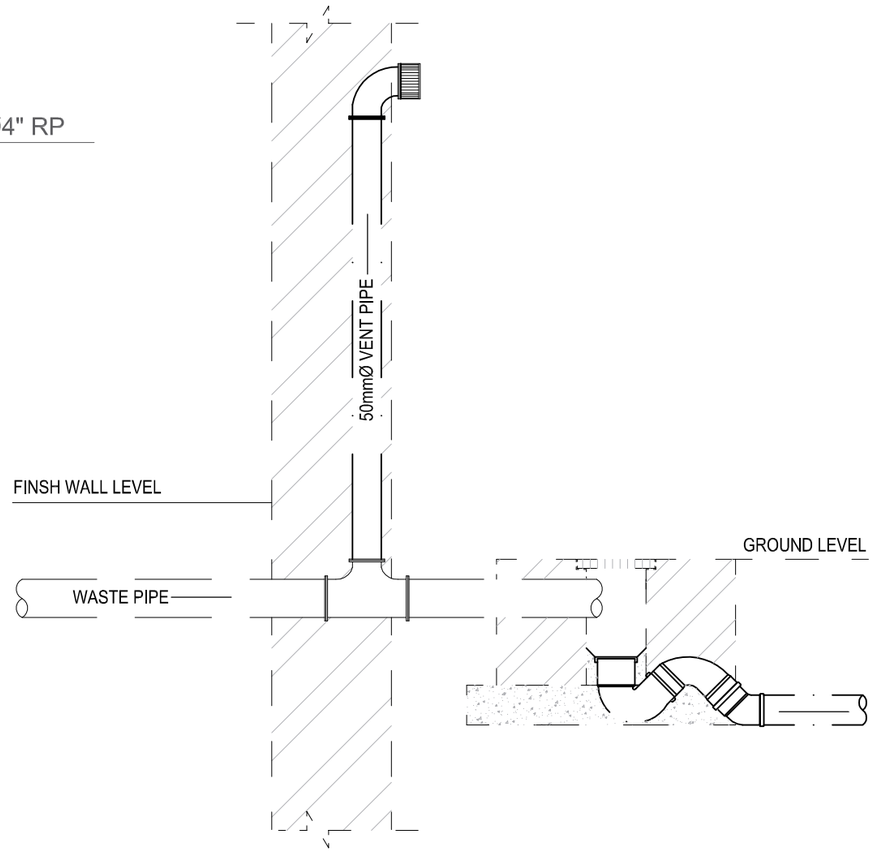

DETAIL OF WASTE VENT PIPE

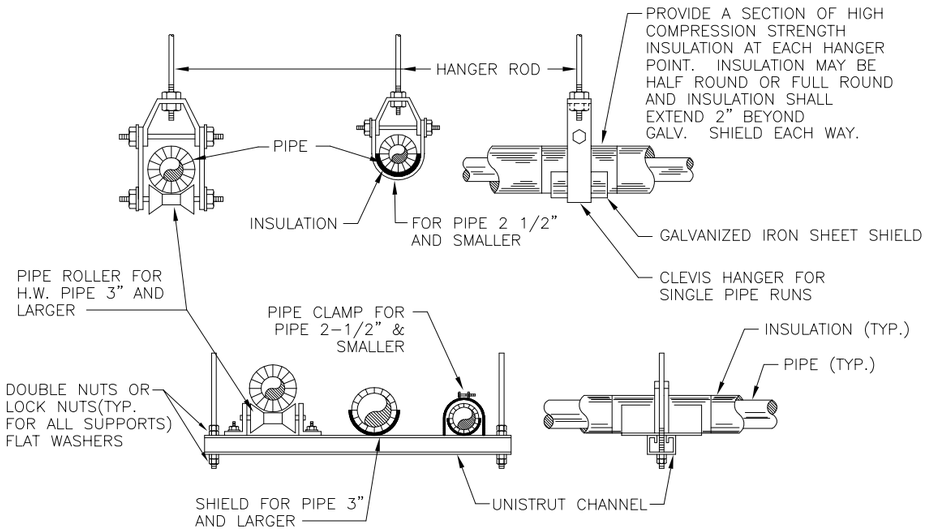

— WATER PIPING HANGERS AND SUPPORTS DETAIL
NO SCALE

— DETAIL OF WASTE VENT PIPE
NO SCALE

ADDITION & REVISION					
ADD./REV. NO.	DATE	DESCRIPTION	DES. BY	CHK. BY	APP. BY

DESIGNER:

NEW VISION ENGINEERING CONSULTANT
Head Office: Office No.B-6 SECOND FLOOR Masood Arcade IJP Road Islamabad.
Ph: +92-51-4848375, Fax: +92-51-4848375
Email: newvisionec@yahoo.com
Regional Office: 287-A Street # 6, Cavalry Ground ,Lahore
Ph: +92-42-37250130

PROJECT:
"PROVISION OF MISSING FACILITIES FOR THE SHAIKH AYAZ UNIVERSITY SHIKARPUR"

TITLE:
TYPICAL DETAILS

CLIENT:
SHAIKH AYAZ UNIVERSITY SHIKARPUR

DESIGNED BY: MF	APPROVED BY:	DATE : MARCH, 2022
DRAWN BY:	JOB NO.	SCALE: N.T.S
DRG. NO. PL-09		

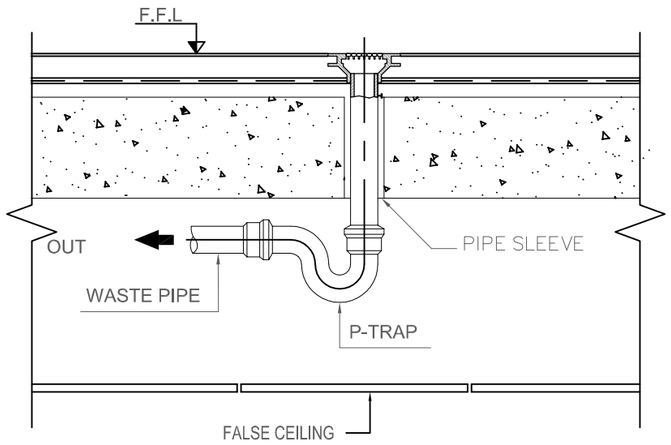

FLOOR DRAIN DETAIL

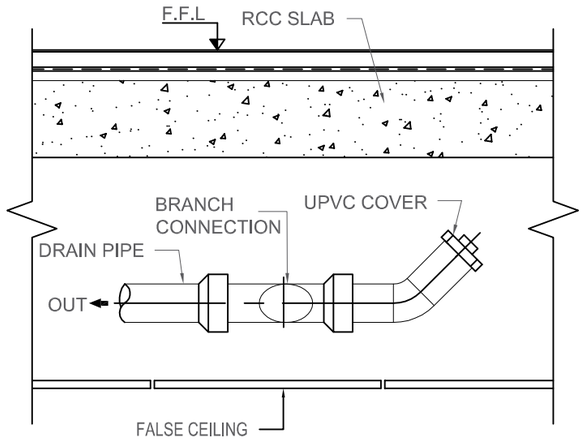

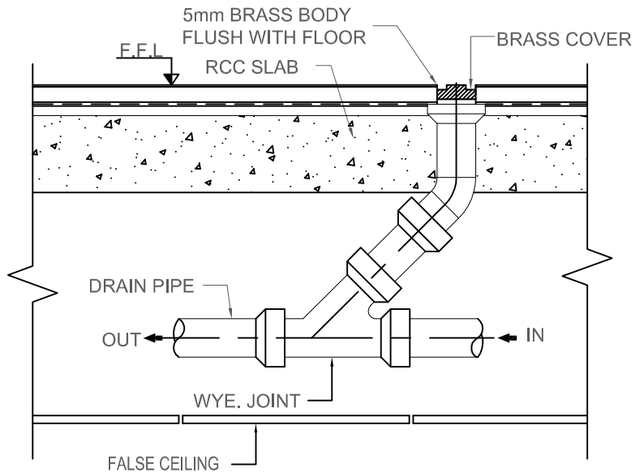

CLEAN OUT PLUG DETAIL

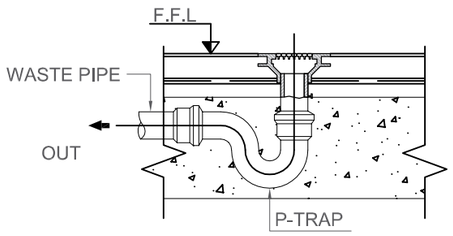

GROUND FLOOR DRAIN DETAIL

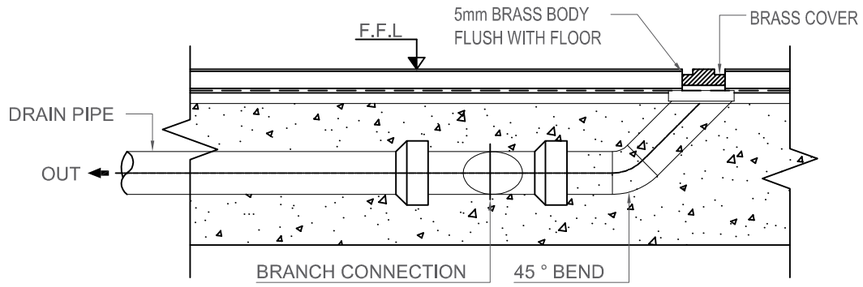

GROUND CLEAN OUT PLUG DETAIL

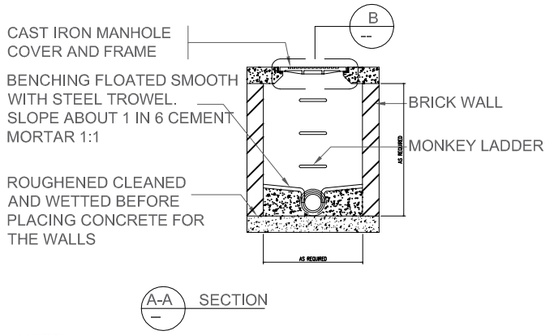

NOTE:-
IF THE MANHOLE EXCEEDED TO 3' DEPTH THEN WE USE THAT MONKEY LADDER.

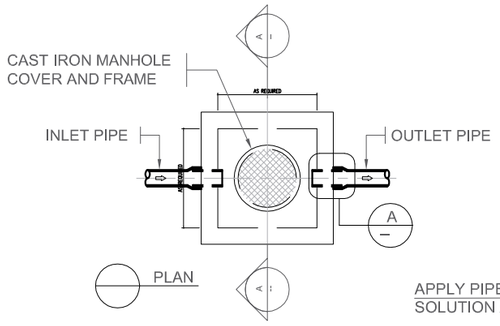

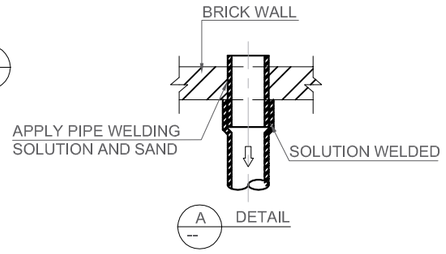

MANHOLE DETAIL

ADDITION & REVISION					
ADD./REV. NO.	DATE	DESCRIPTION	DES. BY	CHK. BY	APP. BY

DESIGNER:

NEW VISION ENGINEERING CONSULTANT
Head Office: Office No.B-6 SECOND FLOOR Masood Arcade
IJP Road Islamabad.
Ph: +92-51-4848375, Fax: +92-51-4848375
Email: newvisionec@yahoo.com
Regional Office: 287-A Street # 6, Cavalry Ground ,Lahore
Ph: +92-42-37250130

PROJECT:
"PROVISION OF MISSING FACILITIES FOR THE SHAIKH AYAZ UNIVERSITY SHIKARPUR"

TITLE:
TYPICAL DETAILS

CLIENT:
SHAIKH AYAZ UNIVERSITY SHIKARPUR

DESIGNED BY: MF	APPROVED BY:	DATE : MARCH, 2022
DRAWN BY:	JOB NO.	SCALE: N.T.S
DRG. NO. PL-10		